searchlight

98520-2700
98520-3000

1

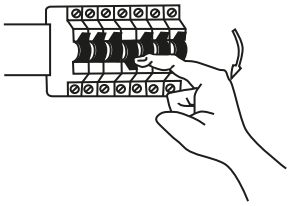

10

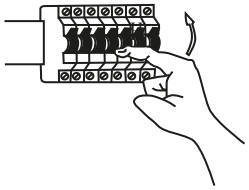

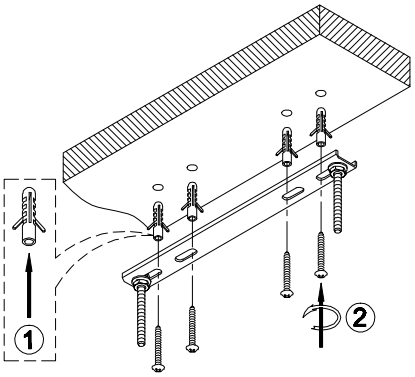

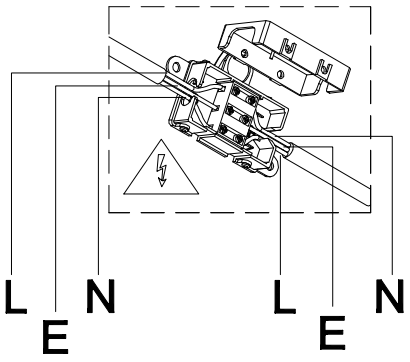

INPUT:220~240V 50/60 Hz ③

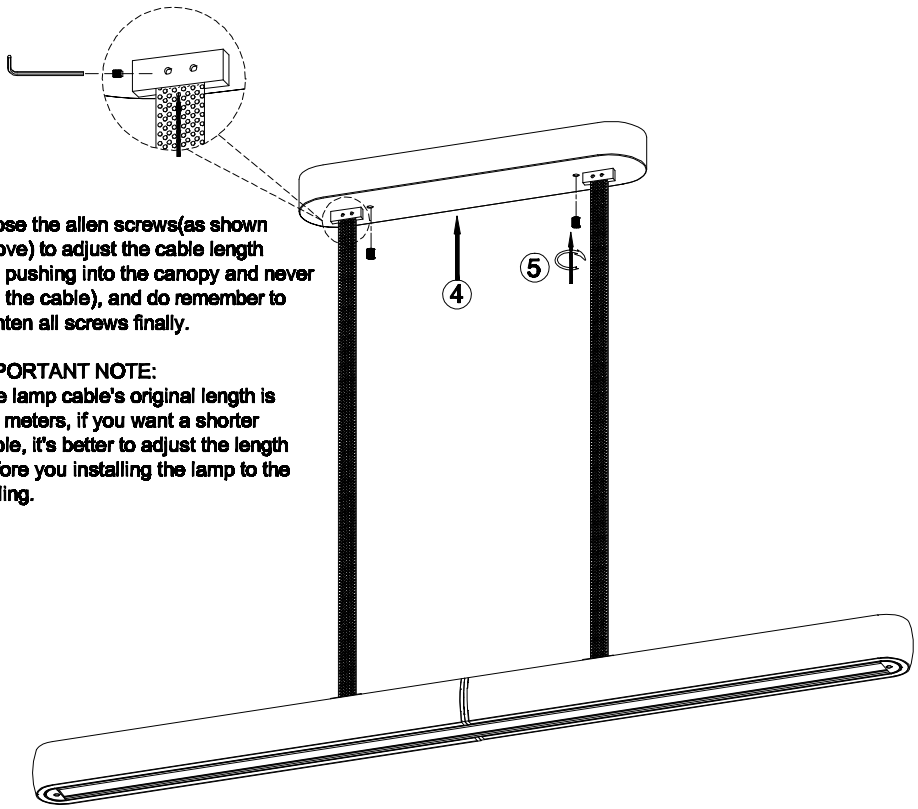

Loose the allen screws(as shown above) to adjust the cable length (by pushing into the canopy and never cut the cable), and do remember to tighten all screws finally.

IMPORTANT NOTE:
The lamp cable's original length is 1.8 meters, if you want a shorter cable, it's better to adjust the length before you installing the lamp to the ceiling.

Q.C APPROVED
30-4-25
ISSUE 1

MAINS SUPPLY

LIVE -Possible colours: Red or Brown

NEUTRAL -Possible colours: Black or Blue

LIGHT FITTING

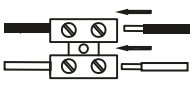

LIVE

NEUTRAL