LUX & BELLE

96281-5

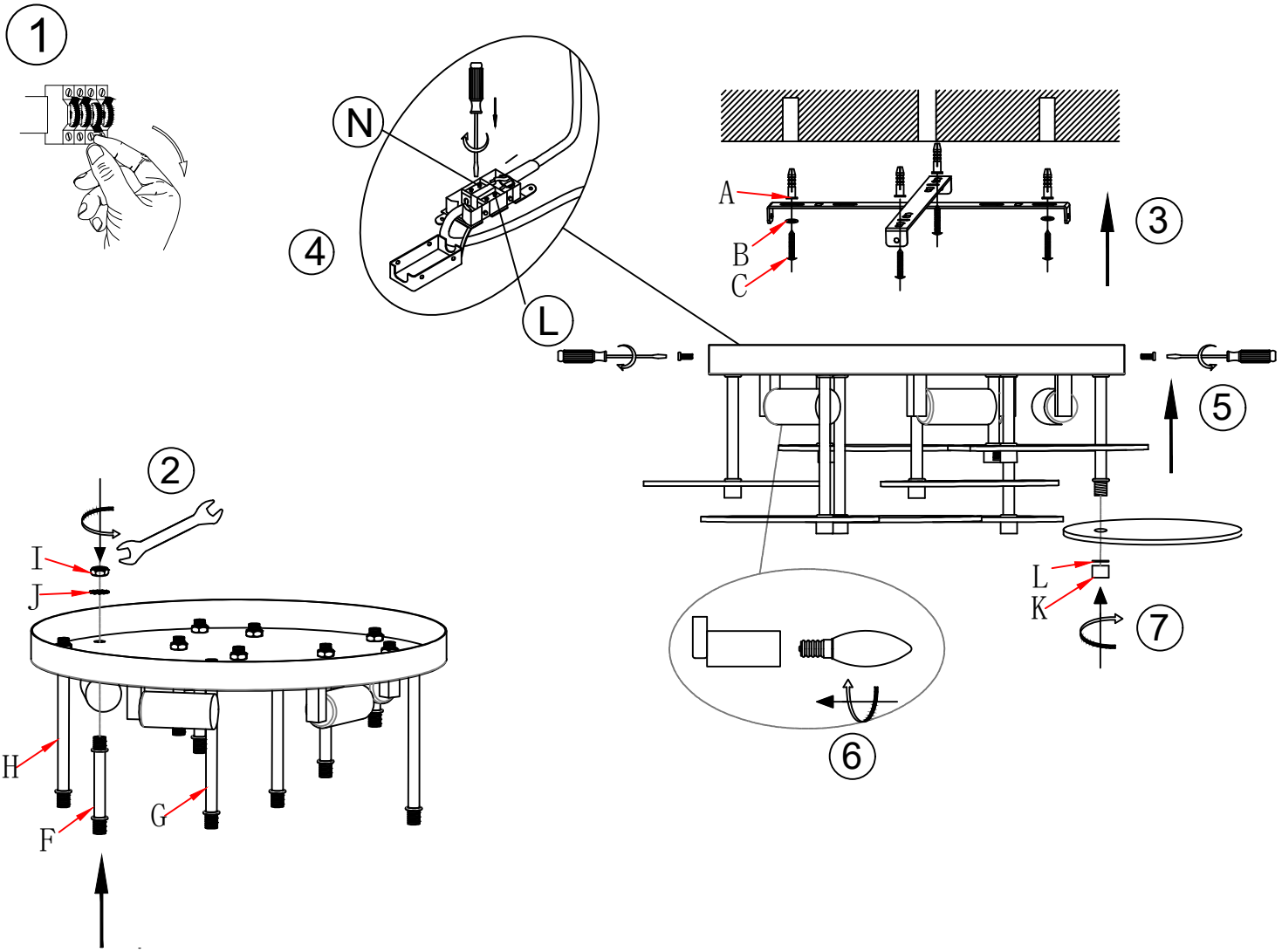

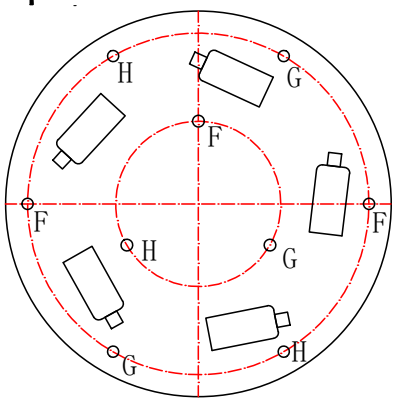

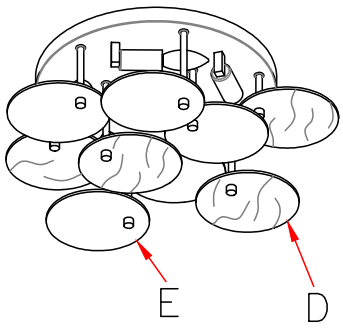

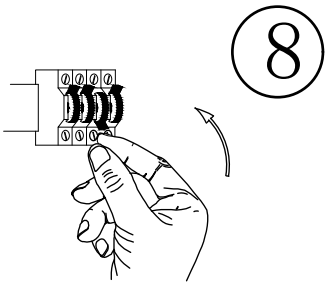

NO	A	B	C	D	E	F	G	H	I	J	K	L
TYPE		-								-		-
Q' TY	4	4	4	4	5	3	3	3	9	9	9	9

Q.C APPROVED 10-06-26 ISSUE 1

MAINS SUPPLY

LIVE -Possible colours: Red or Brown

NEUTRAL -Possible colours: Black or Blue

LIGHT FITTING

