LUX & BELLE

96281-2

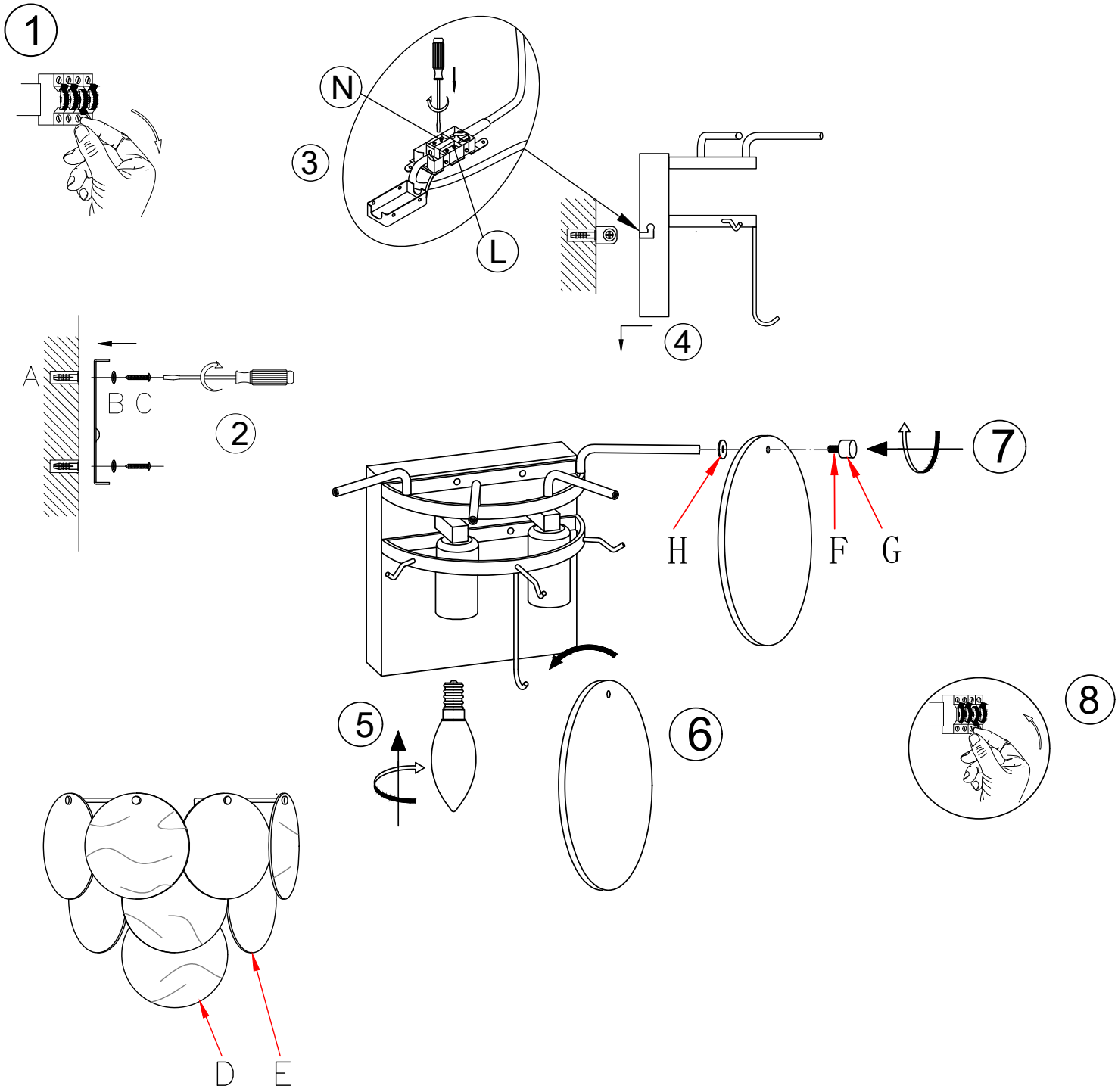

NO	A	B	C	D	E	F	G	H
TYPE								
Q' TY	2	2	2	4	4	4	4	4

Q.C APPROVED 10-06-26 ISSUE 1

MAINS SUPPLY

LIVE -Possible colours: Red or Brown

NEUTRAL -Possible colours: Black or Blue

LIGHT FITTING

