searchlight

82431

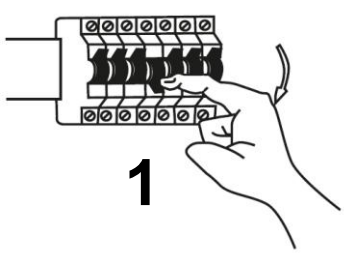

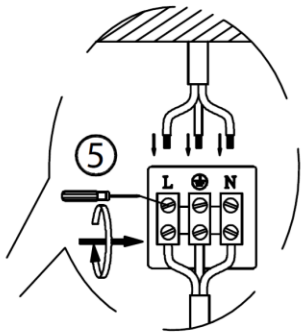

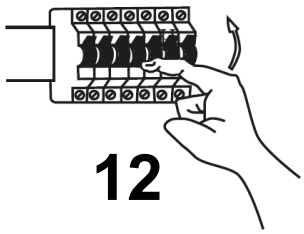

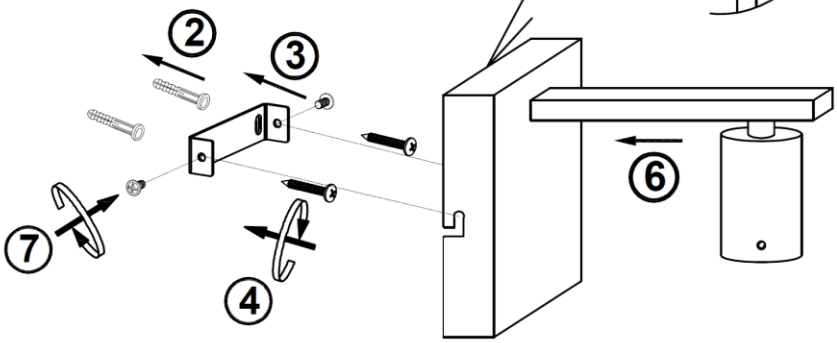

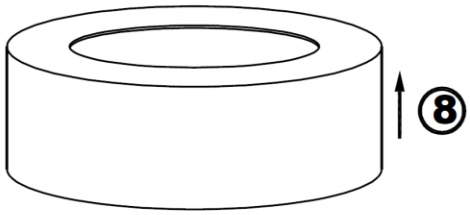

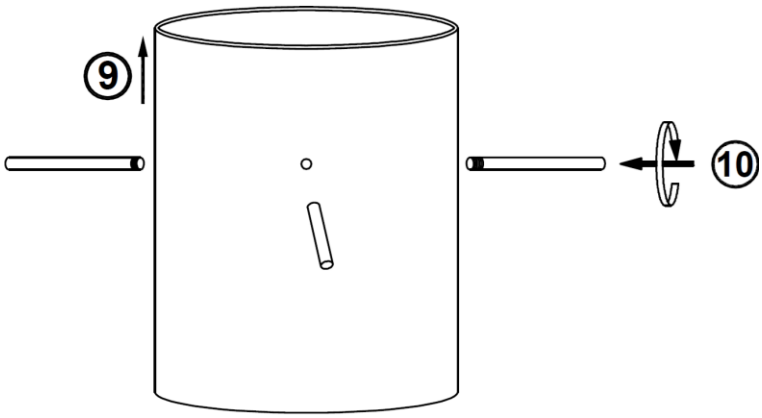

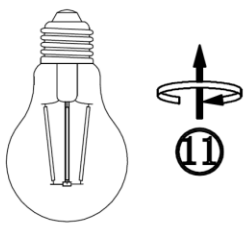

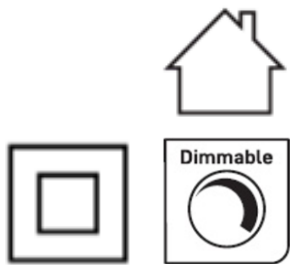

Q.C APPROVED 30/06/2026 Issue 1



MAINS SUPPLY		LIGHT FITTING
LIVE - Possible colours : Red or Brown		LIVE
NEUTRAL - Possible colours : Black or Blue		NEUTRAL