searchlight

82345-3

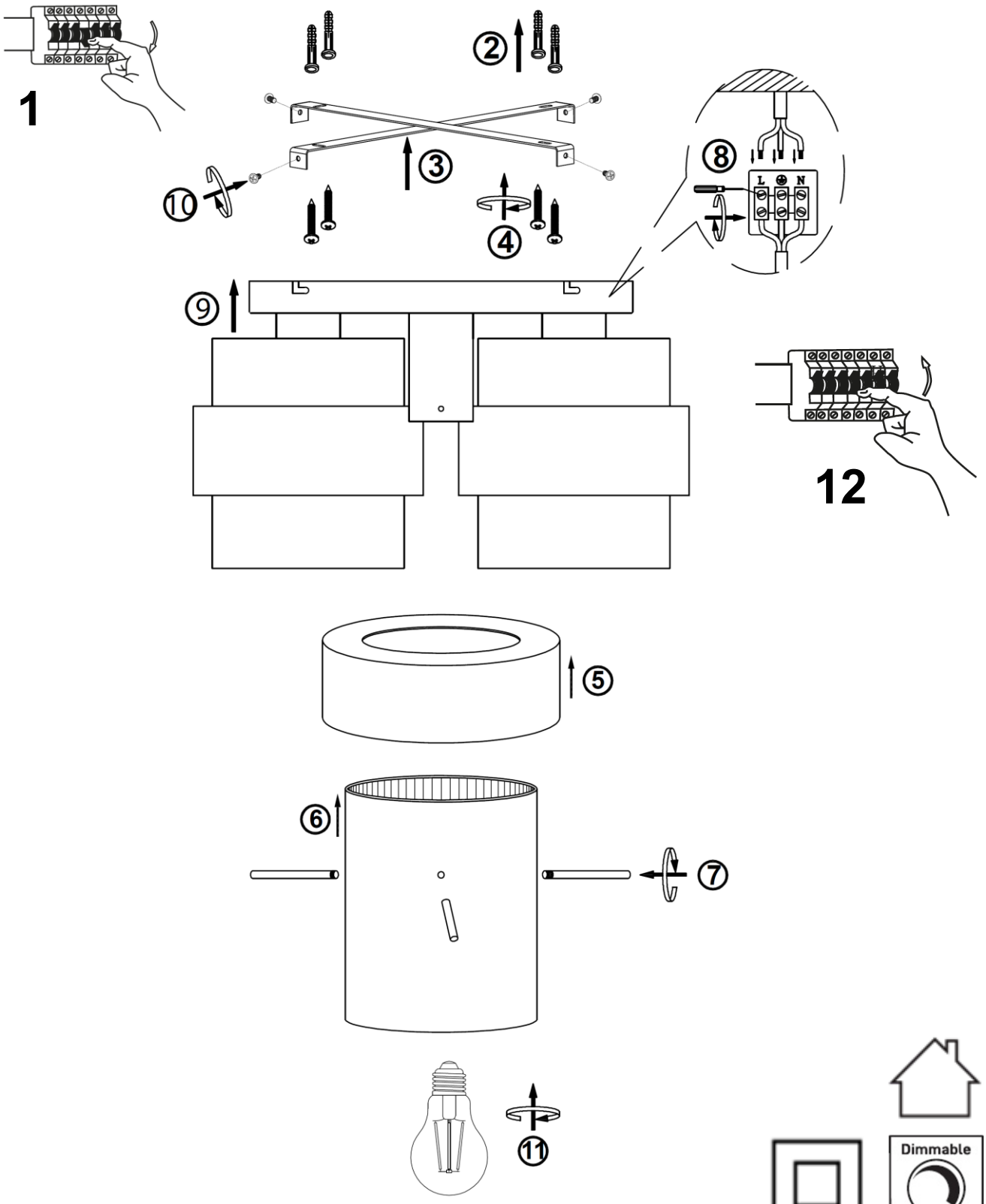

APPROVED
30/06/2026
Issue 1

MAINS SUPPLY	LIGHT FITTING
LIVE - Possible colours : Red or Brown	LIVE
NEUTRAL - Possible colours : Black or Blue	NEUTRAL