searchlight

66140

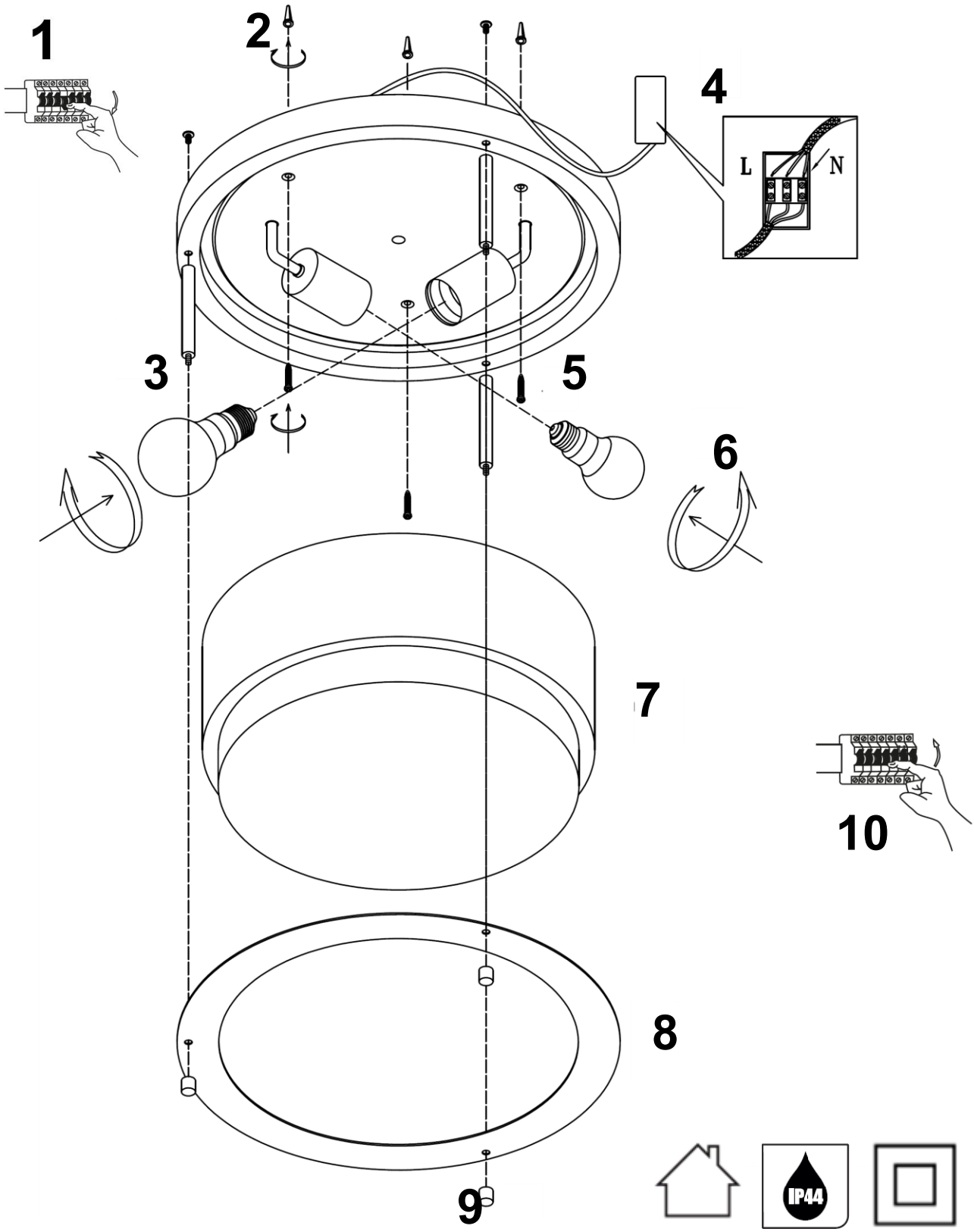

Q.C APPROVED 26/06/2026 Issue 1

MAINS SUPPLY	LIGHT FITTING
LIVE - Possible colours : Red or Brown	LIVE
NEUTRAL - Possible colours : Black or Blue	NEUTRAL