LUX & BELLE

44780-16GO

MAINS SUPPLY	LIGHT FITTING
LIVE - Possible colours : Red or Brown	LIVE
NEUTRAL - Possible colours : Black or Blue	NEUTRAL

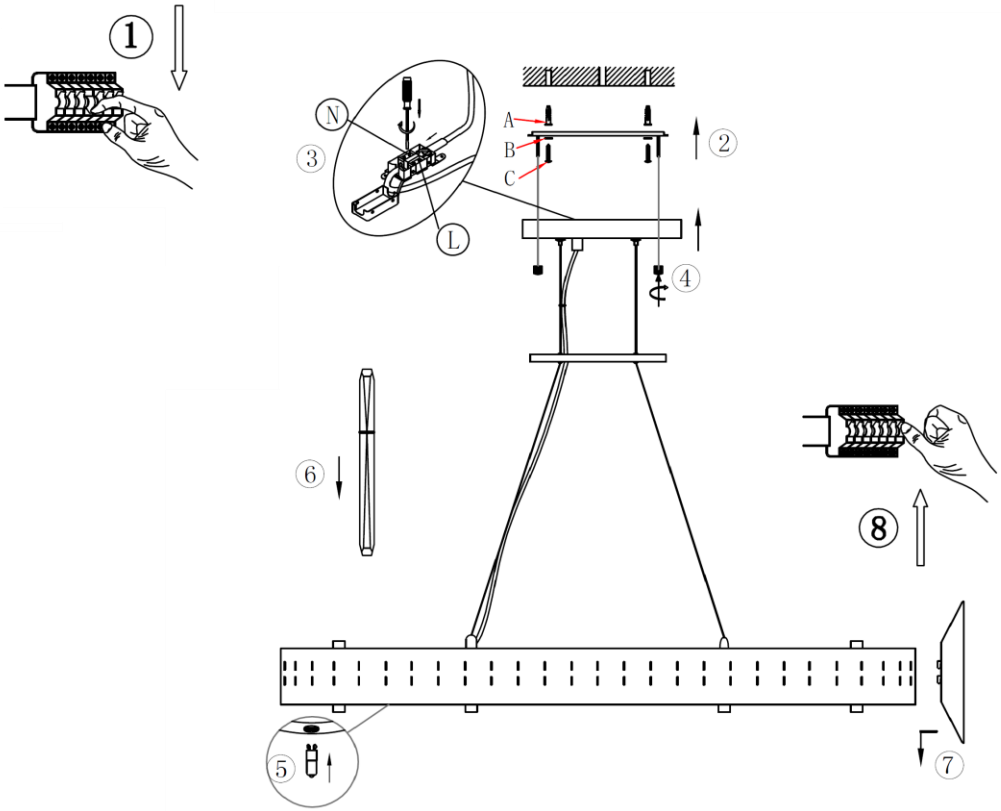

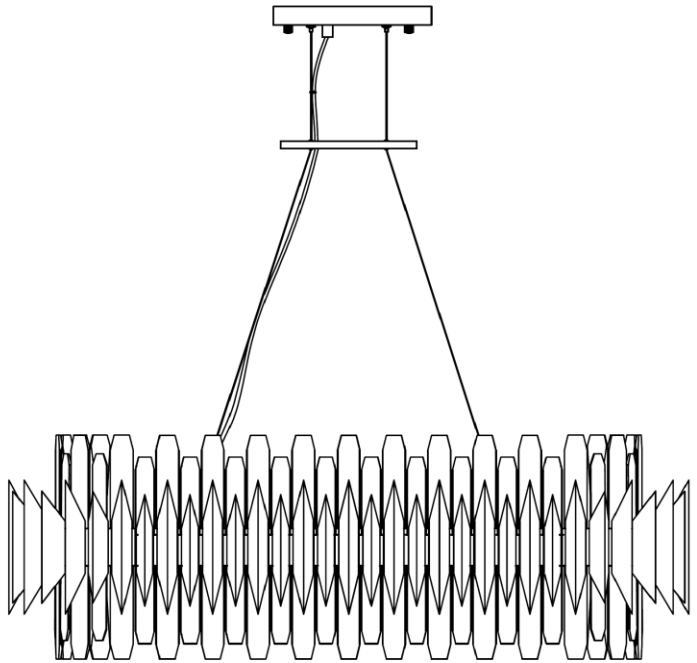

NO.	A	B	C	D	E	F	G
TYPE		-					
Q'TY	2	2	2	28	28	28	28

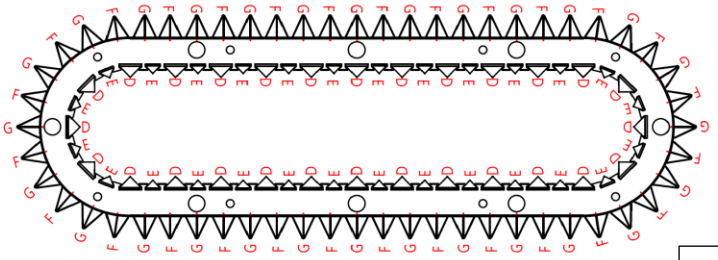

Dimmable

APPROVED
23/06/2026
Issue 1