searchlight

# 39970BK

| MAINS SUPPLY | LIGHT FITTING |
|---|---|
| LIVE - Possible colours : Red or Brown | LIVE |
| NEUTRAL - Possible colours : Black or Blue | NEUTRAL |

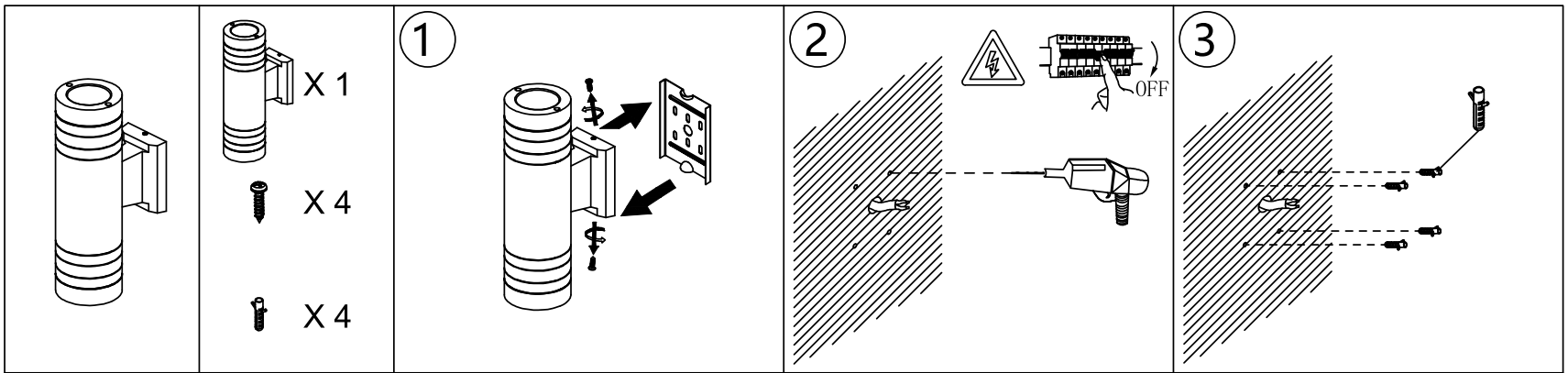


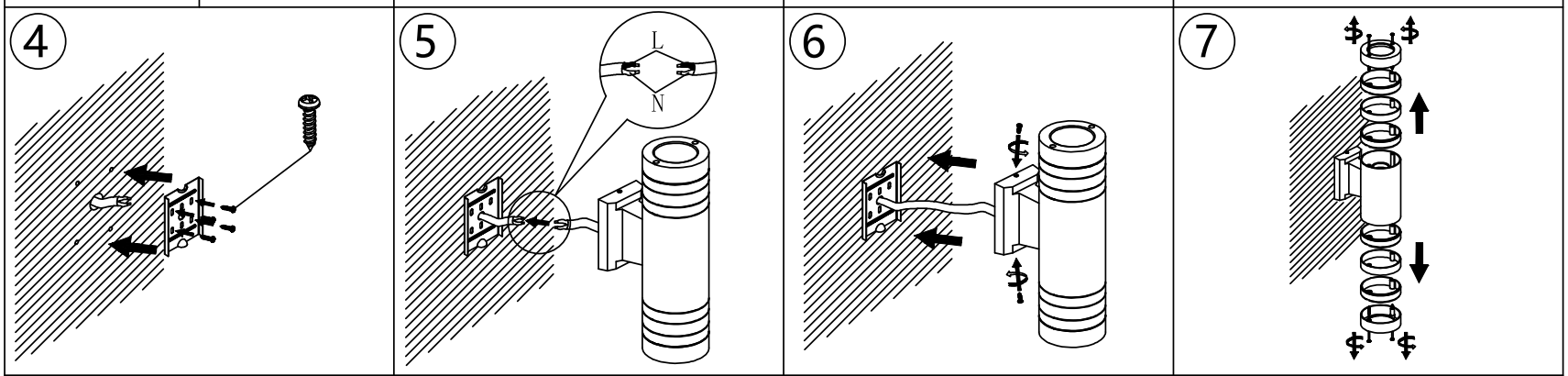


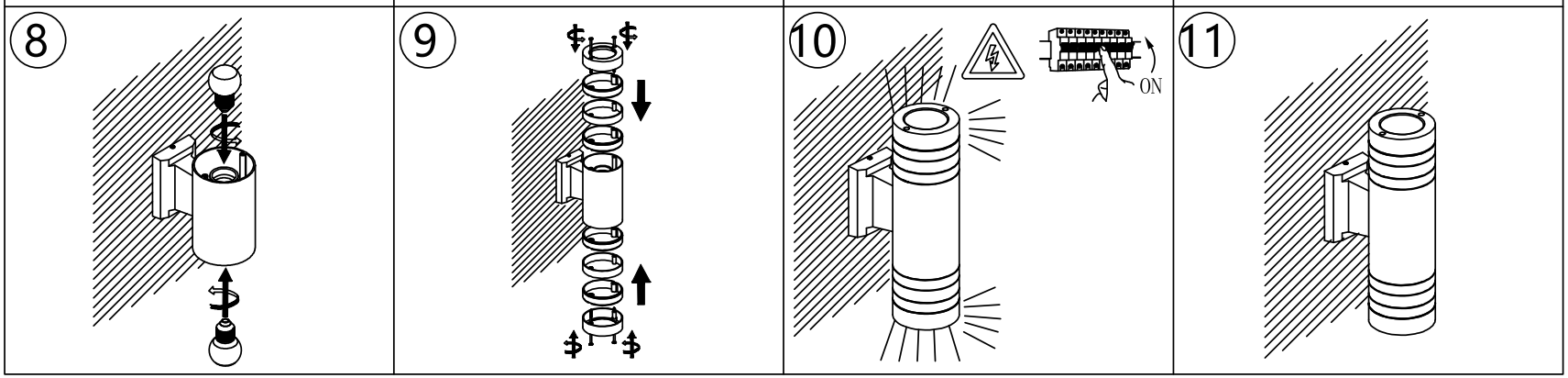


CE UKCA

EAC

IP44

APPROVED
15/06/2026
Issue 1