searchlight

39910BK

MAINS SUPPLY — **LIGHT FITTING**

LIVE - Possible colours : Red or Brown — LIVE

EARTH - Un sleeved copper or (Green / Yellow) — EARTH

NEUTRAL - Possible colours : Black or Blue — NEUTRAL

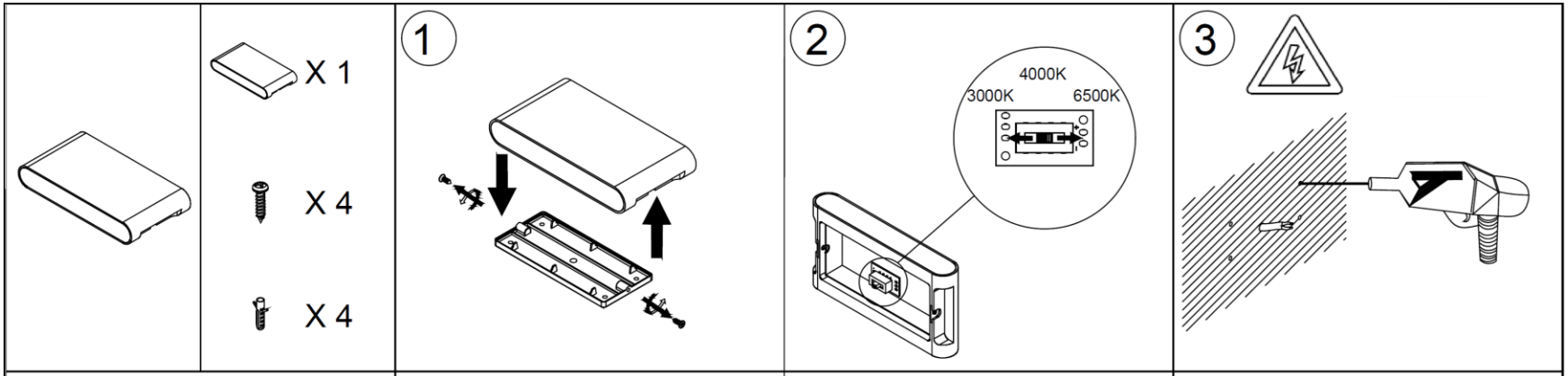

CE UKCA EAC

IP44

APPROVED
15/06/2026
Issue 1