LUX & BELLE

36510-2GO

MAINS SUPPLY — **LIGHT FITTING**

LIVE - Possible colours : Red or Brown — LIVE

EARTH - Un sleeved copper or (Green / Yellow) — EARTH

NEUTRAL - Possible colours : Black or Blue — NEUTRAL

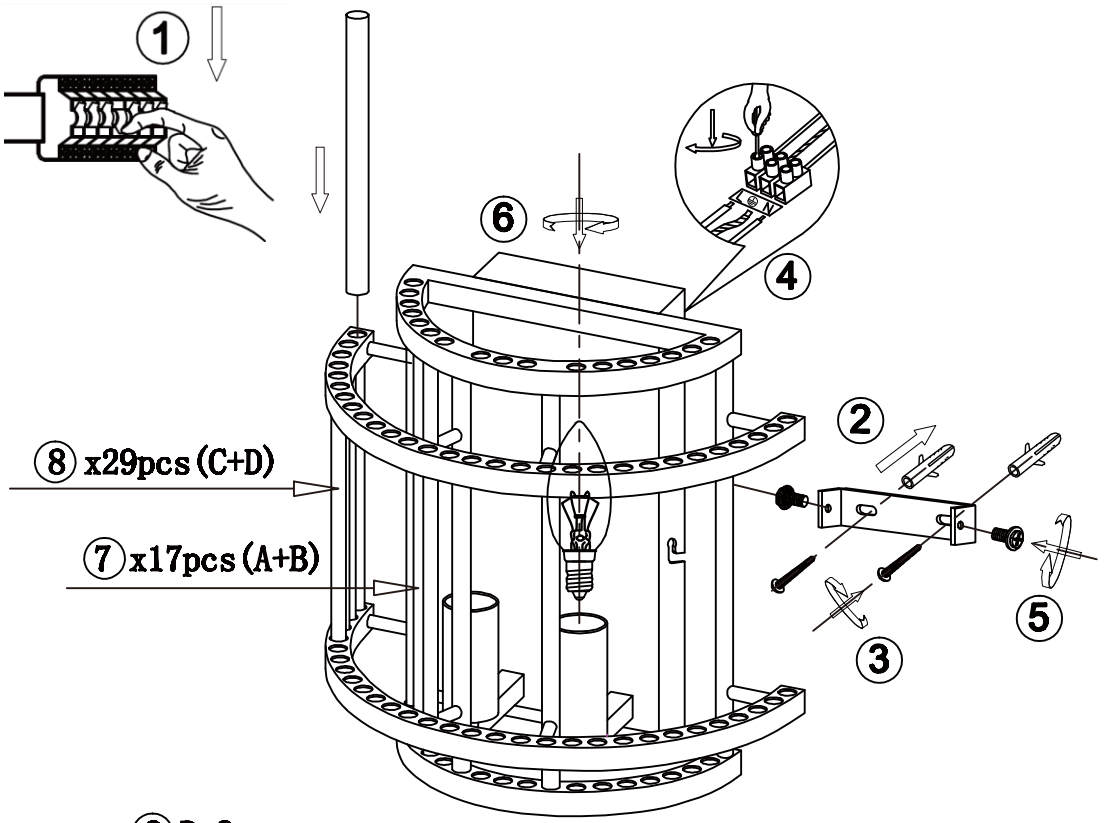

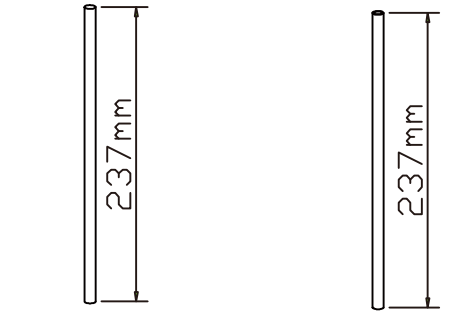

A:Glass Rod B:Metal Rod

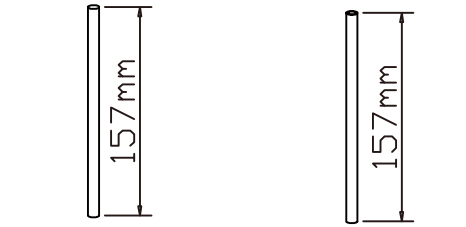

C:Glass Rod D:Metal Rod

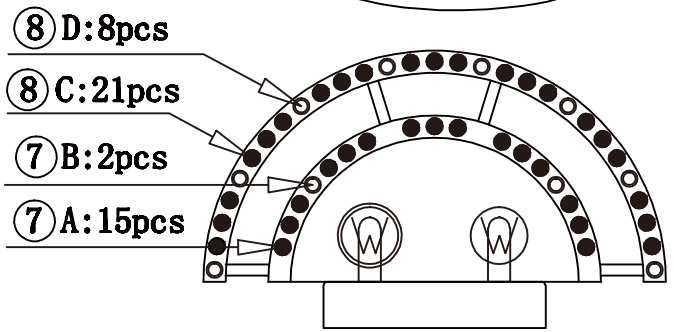

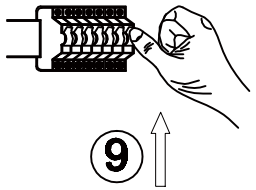

DIMMABLE

APPROVED
19/06/2026
Issue 1