IMPORTANT! KEEP FOR FUTURE REFERENCE

SOLACE+CO

Amber Ottoman Bed

Double /King Size

ASSEMBLY INSTRUCTION

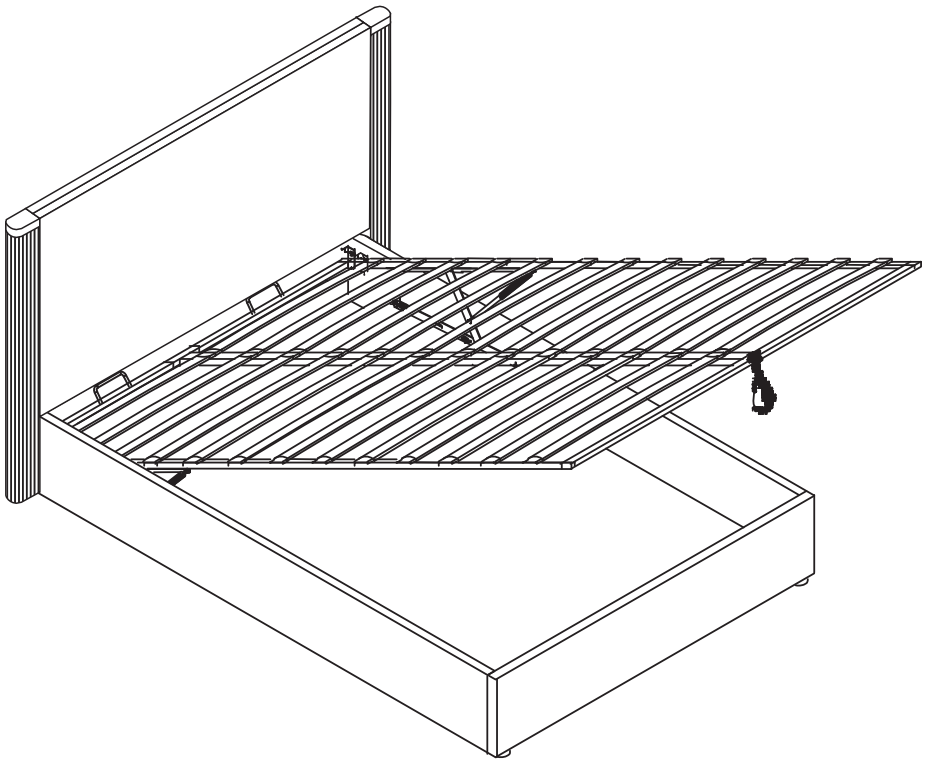

FOR PARTS & TECHNICAL SUPPORT VISIT:

Telephone: 01924950108

Email Address: support@bedkingdom.co.uk

Manufacturer:	FLAIR FURNITURE LTD	EU REP	Contact Information:	eucomply OÜ	
Address:	Oldfield Ln, Heckmondwike WF16 0JD		Address:	Pärnu mnt 139b-14 11317 Tallinn, Estonia	
Contact Information:	support@bedkingdom.co.uk 01924950108		Contact Information:	hello@eucompliancepartner.com +3375690241	

⚠ WARNING: Contains small parts – choking hazard.

⚠ WARNING: Plastic packaging may cause suffocation. Keep away from babies and young children.

⚠ WARNING: Keep away from open flames and other heat sources.

⚠ WARNING: Ensure adequate airflow and ventilation at all times to prevent airway obstruction.

⚠ WARNING: Never leave a child unattended in a stroller with this product. Strangulation hazard may occur.

⚠ WARNING: Ensure all attachments are secure before use. Do not use if parts are loose or damaged.



2 Person assembly recommend

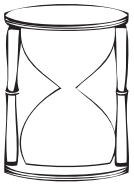

1.5 hours (Approx) Set Up

DETAIL VIEW

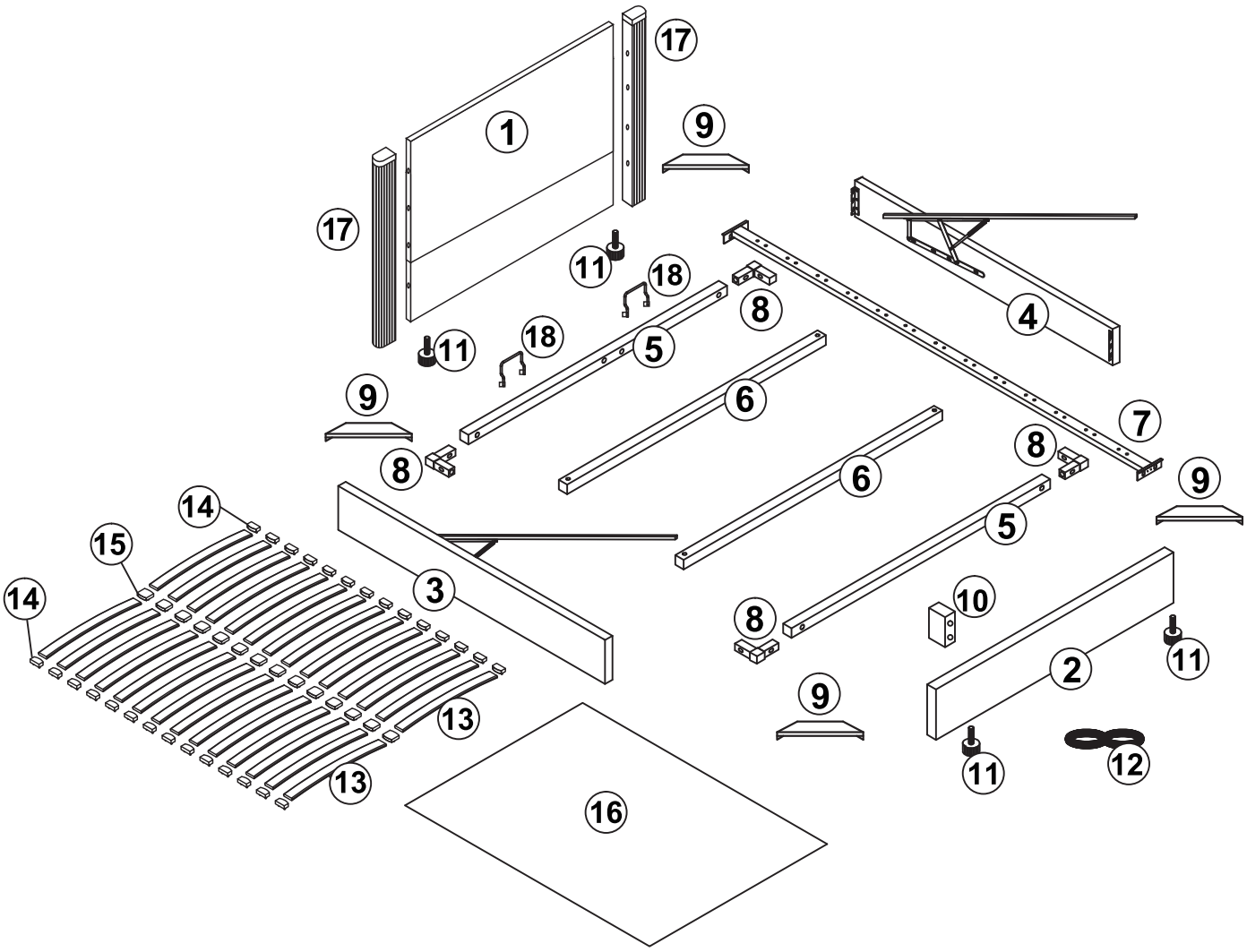

Parts List

CARTON 1 OF 3			CARTON 2 OF 3		
No.	Part Name	Pcs	No.	Part Name	Pcs
①	HEADBOARD	1	③	LEFT SIDE RAIL	1
②	FOOTBOARD	1	④	RIGHT SIDE RAIL	1
⑧	PLASTIC BRACKET	4	⑤	FRONT & BACK FRAME RAIL	2
⑨	CORNER BRACKET	4	⑥	CENTRE FRAME RAIL	2
⑩	HOLDING BLOCK	1	⑦	CENTRE OTTOMAN METAL FRAME	1
⑪	ADJUSTABLE LEG	4	CARTON 3 OF 3		
⑫	BELT	1	No.	Part Name	
⑬	BENT SLAT (DOUBLE & KING)	26/28	⑰	BED POST - LEFT & RIGHT	2
⑭	PLASTIC SLAT CAP (DOUBLE & KING)	26/28			
⑮	CENTRE SLAT CAP (DOUBLE & KING)	13/14			
⑯	NON WOVEN FABRIC	1			
⑱	MATTRESS POSITIONING HANDLE	2			
	HARDWARE	1			

Hardware List

A  M8x25mm 12 pcs	B  M6x15mm 12 pcs	C  M6x40mm 4 pcs	D  M8x18mm 12 pcs	E  M8x13mm 12 pcs
F  M6x65mm 2 pcs	G  M6x30mm 8 pcs	H  M6x18mm 8 pcs	I  M8x13mm 2 pcs	J  1 pcs
K 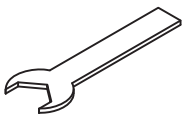 1 pcs				

1

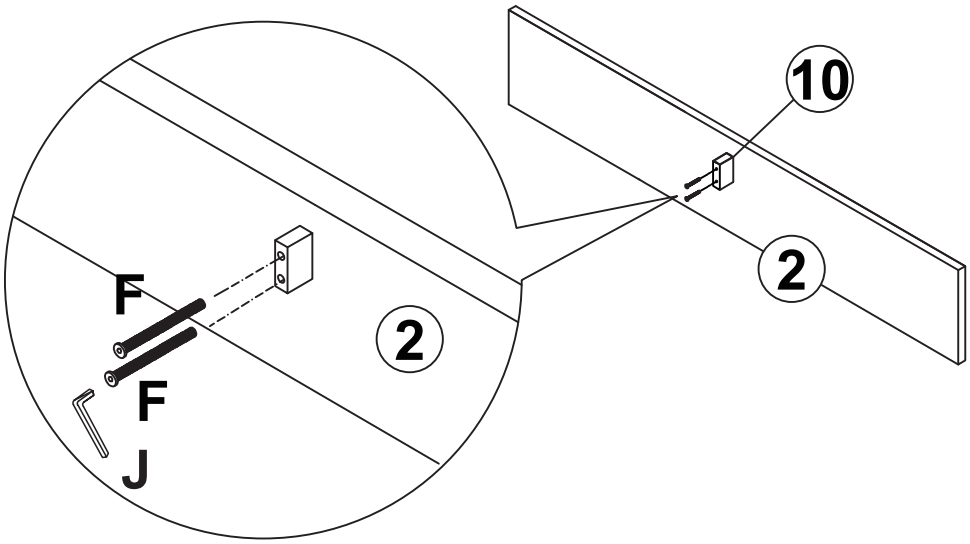
10
2
F
F
J
2

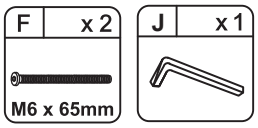
F x 2
M6 x 65mm
J x 1

2

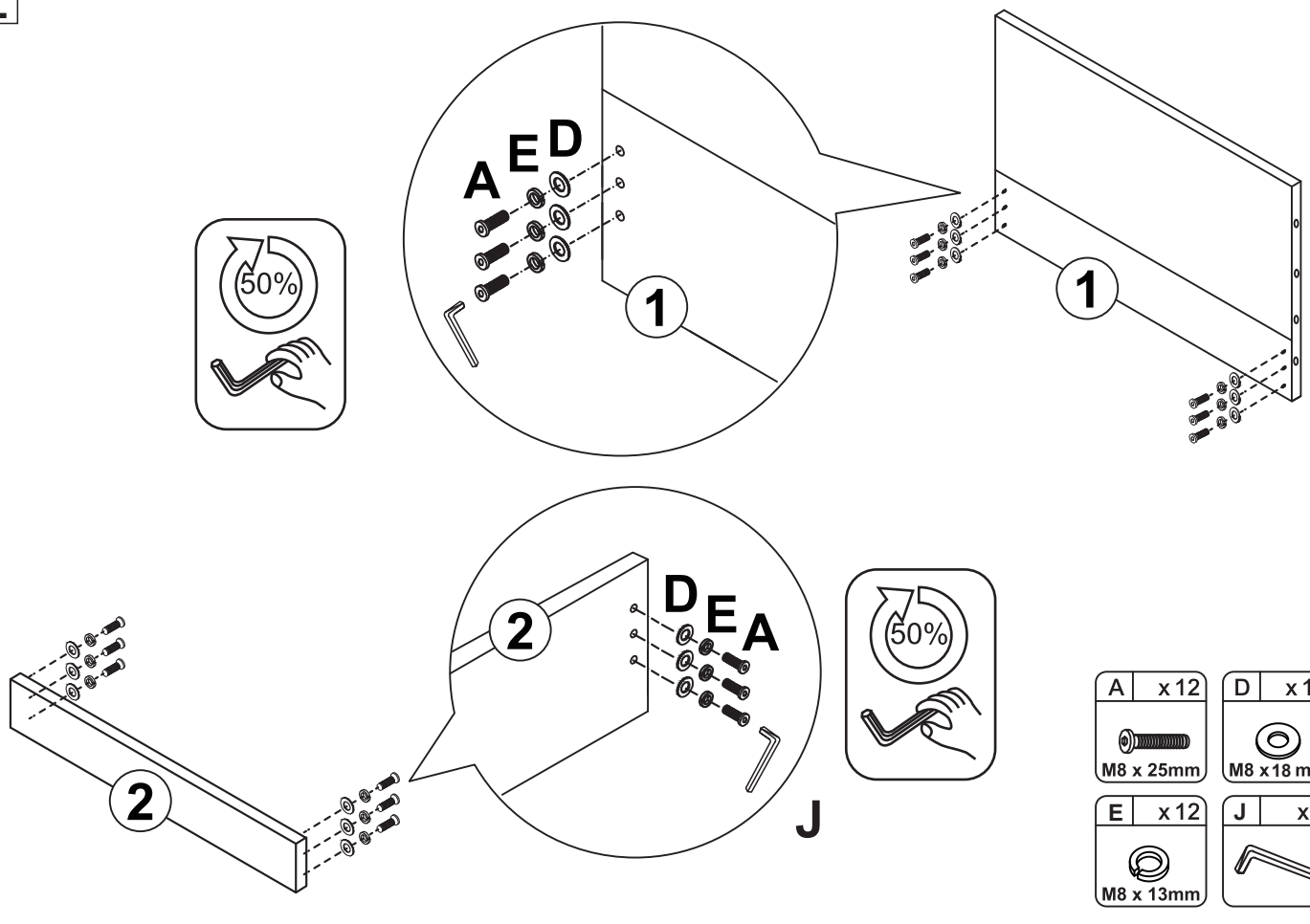
A E D
1
50%
1
D E A
2
2
50%
J

A x 12
M8 x 25mm
D x 12
M8 x 18 mm
E x 12
M8 x 13mm
J x 1

3

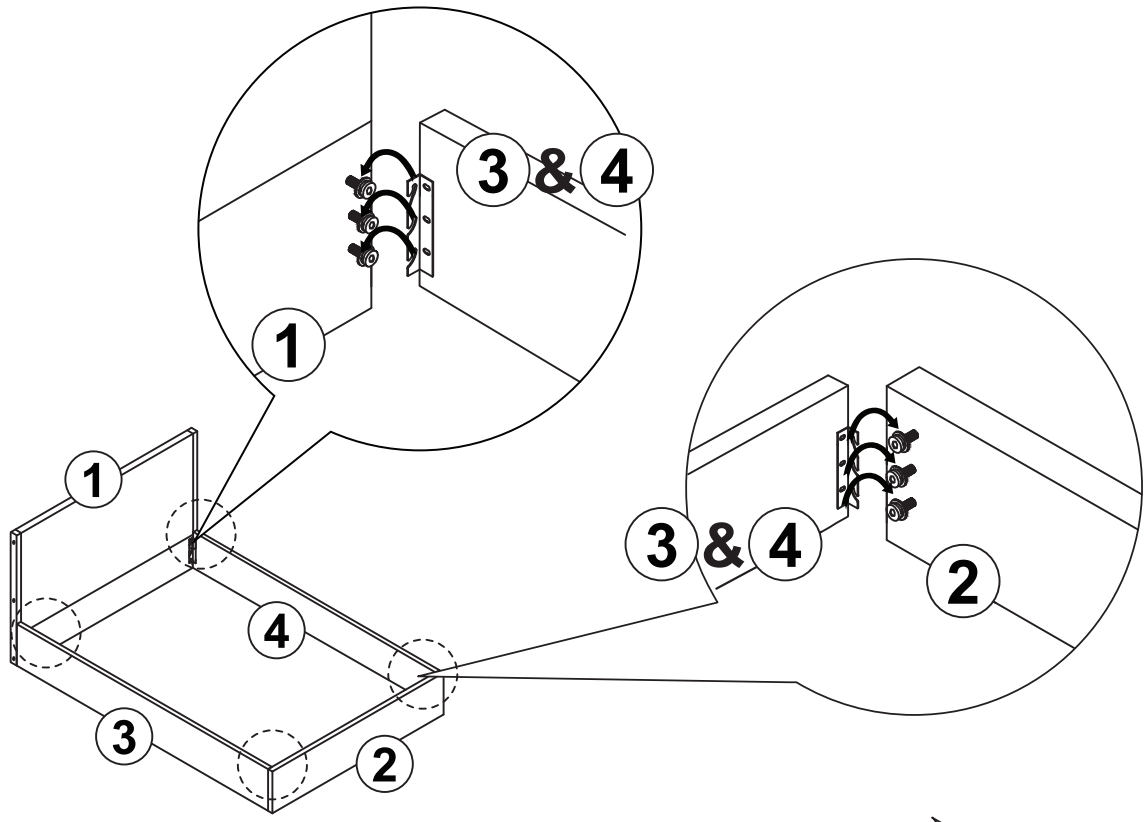

MAKE CERTAIN THE BED IS SQUARE AS SHOWN.
Note:THEN tighten all bolts 100% using allen key

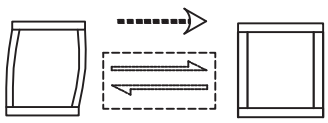

4

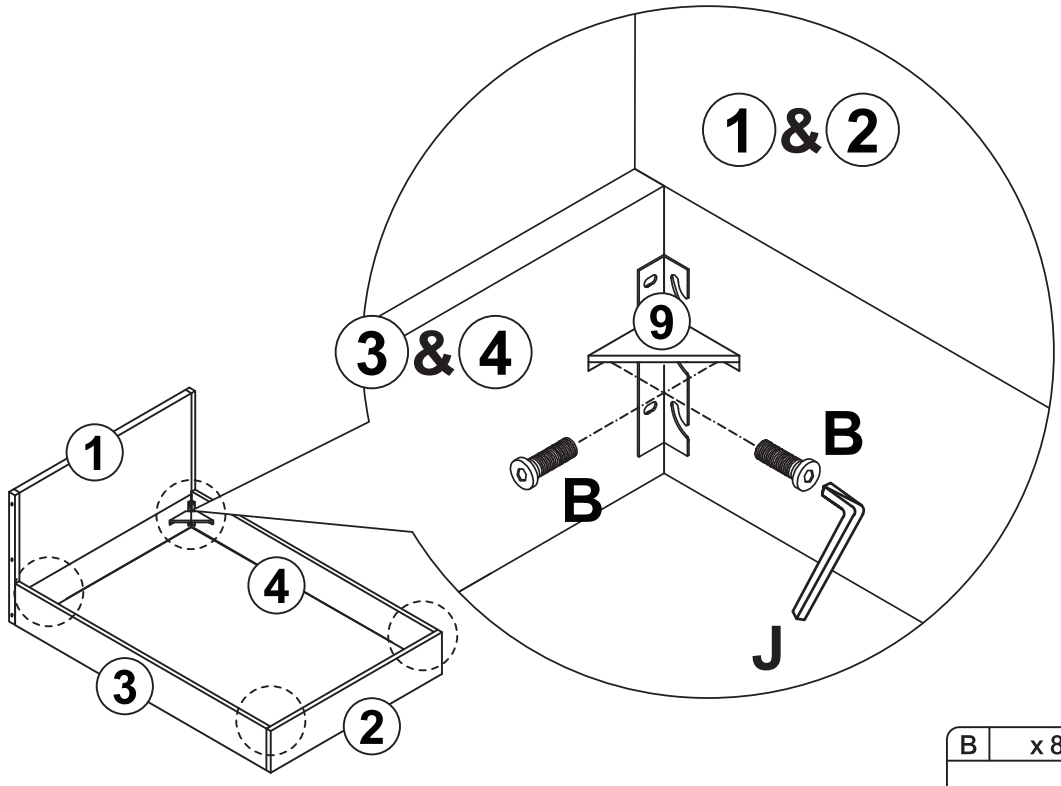

B	x 8
M6 x 15mm	

J	x 1

5

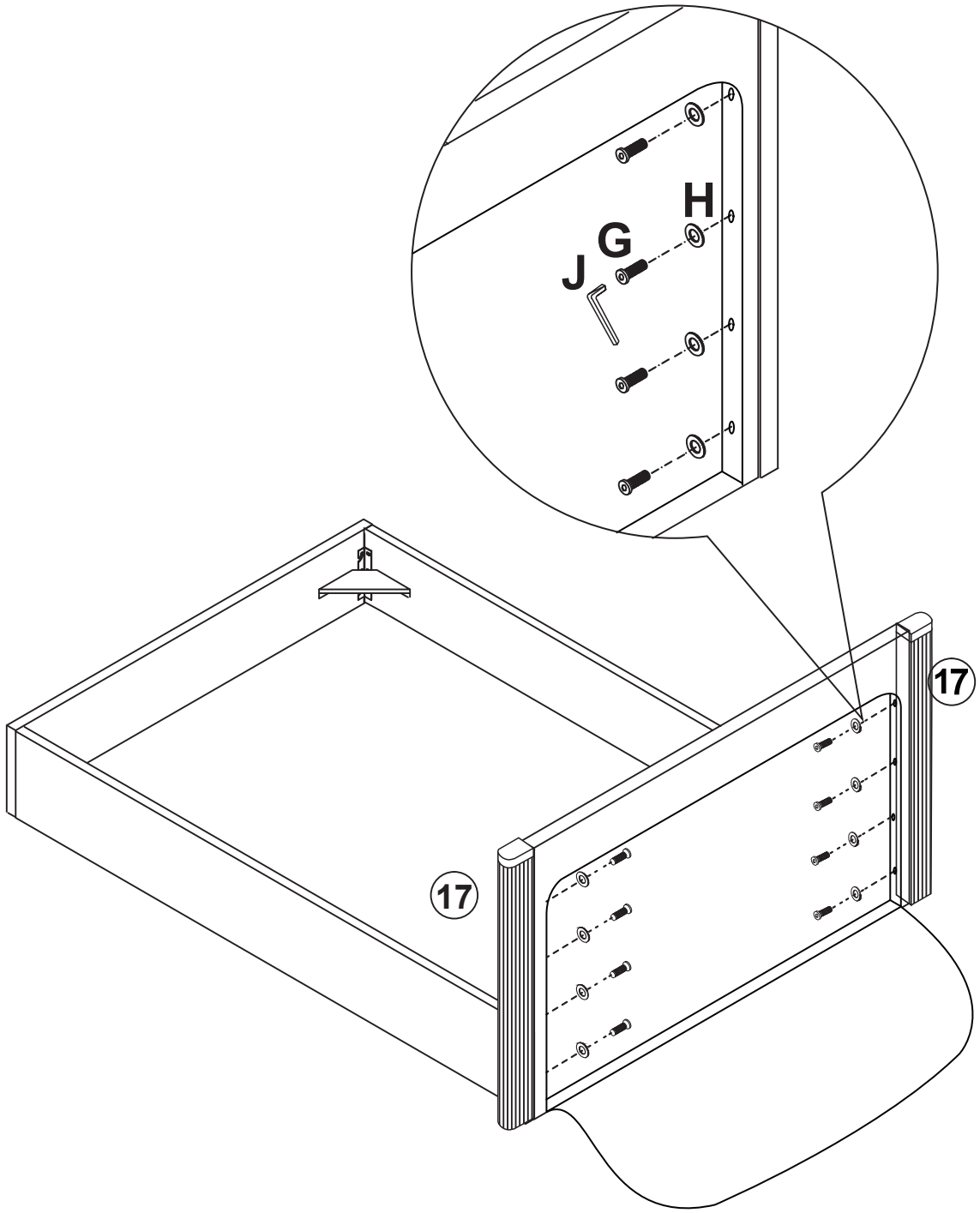

G	x 8
M6 x 30mm	

H	x 8
M6 x 18mm	

J	x 1

6

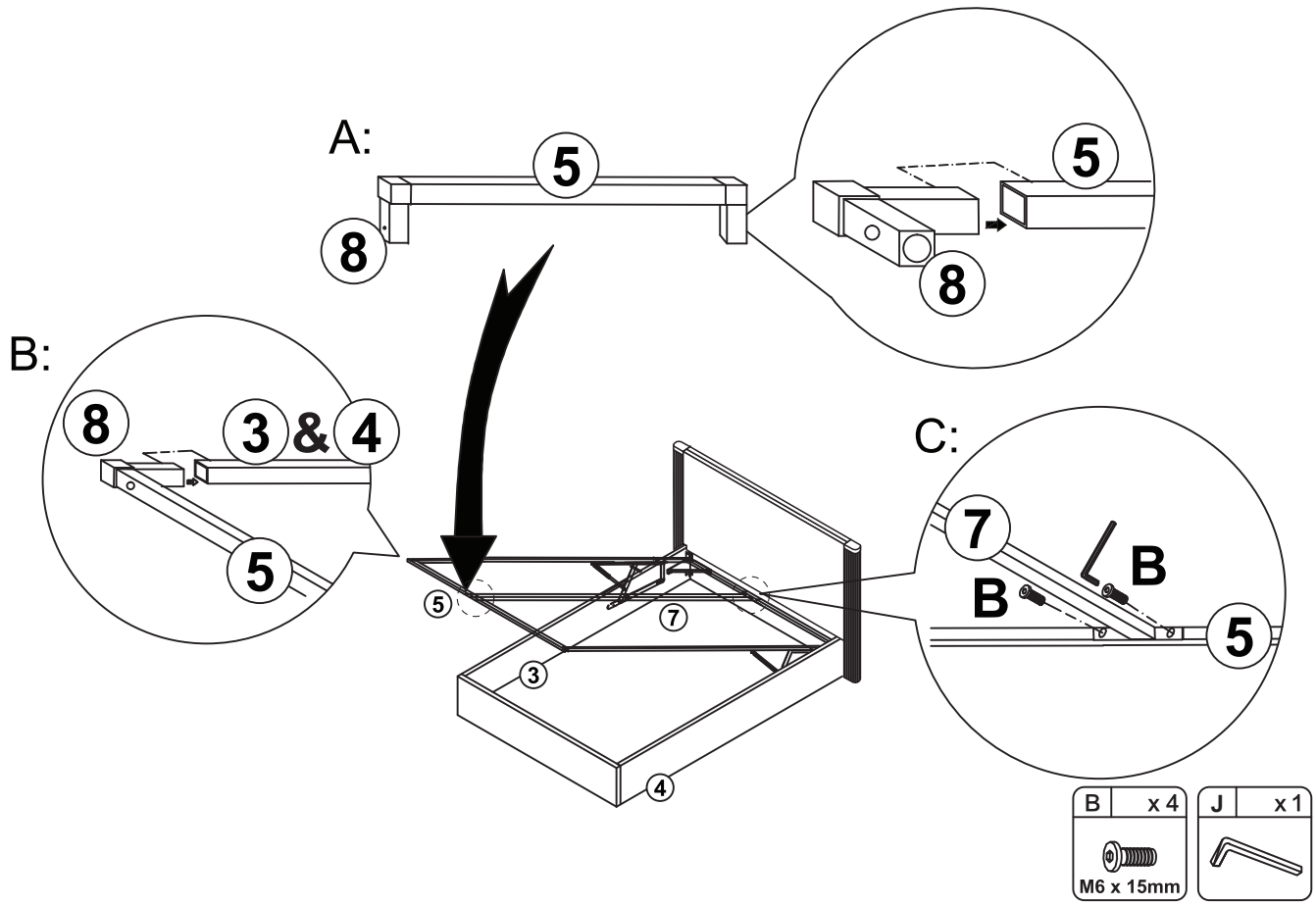

B	x 4	J	x 1
M6 x 15mm			

7

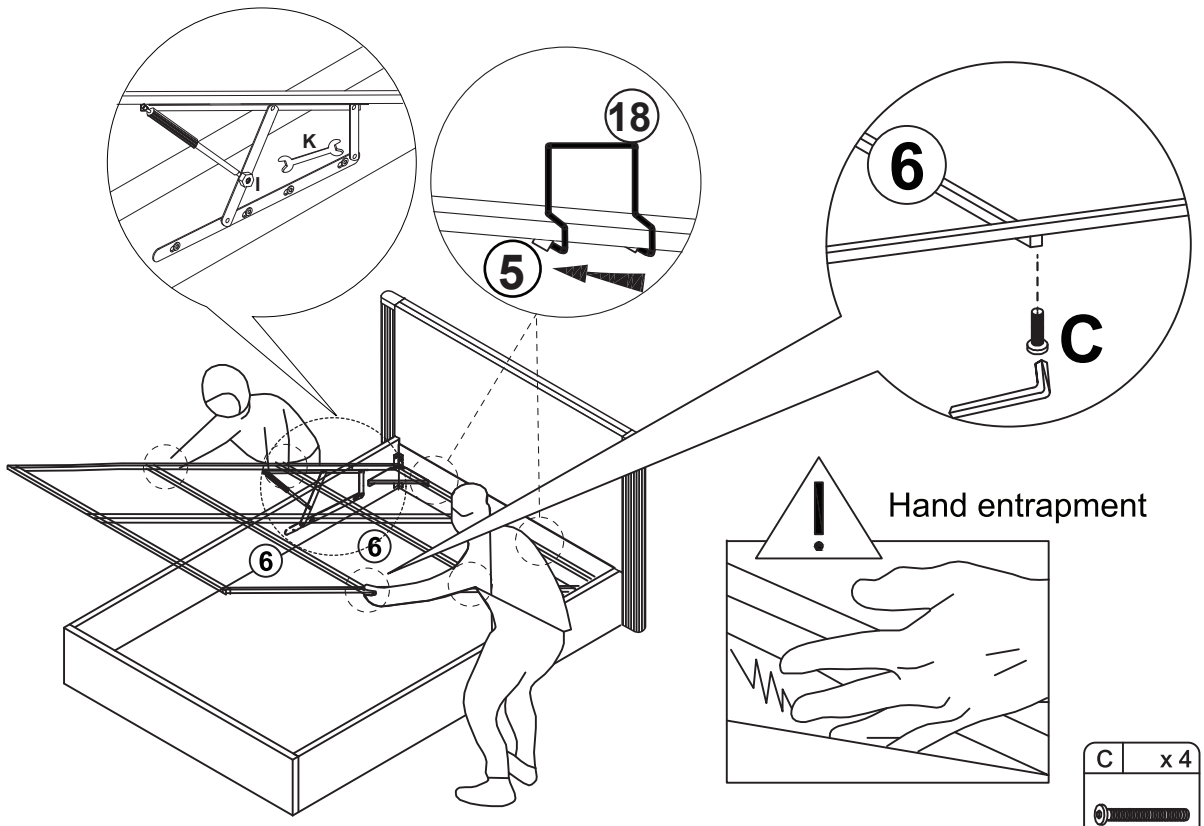

C	x 4	J	x 1
M6 x 40mm			

I	x 2	K	x 1
M8 x 13mm			

8

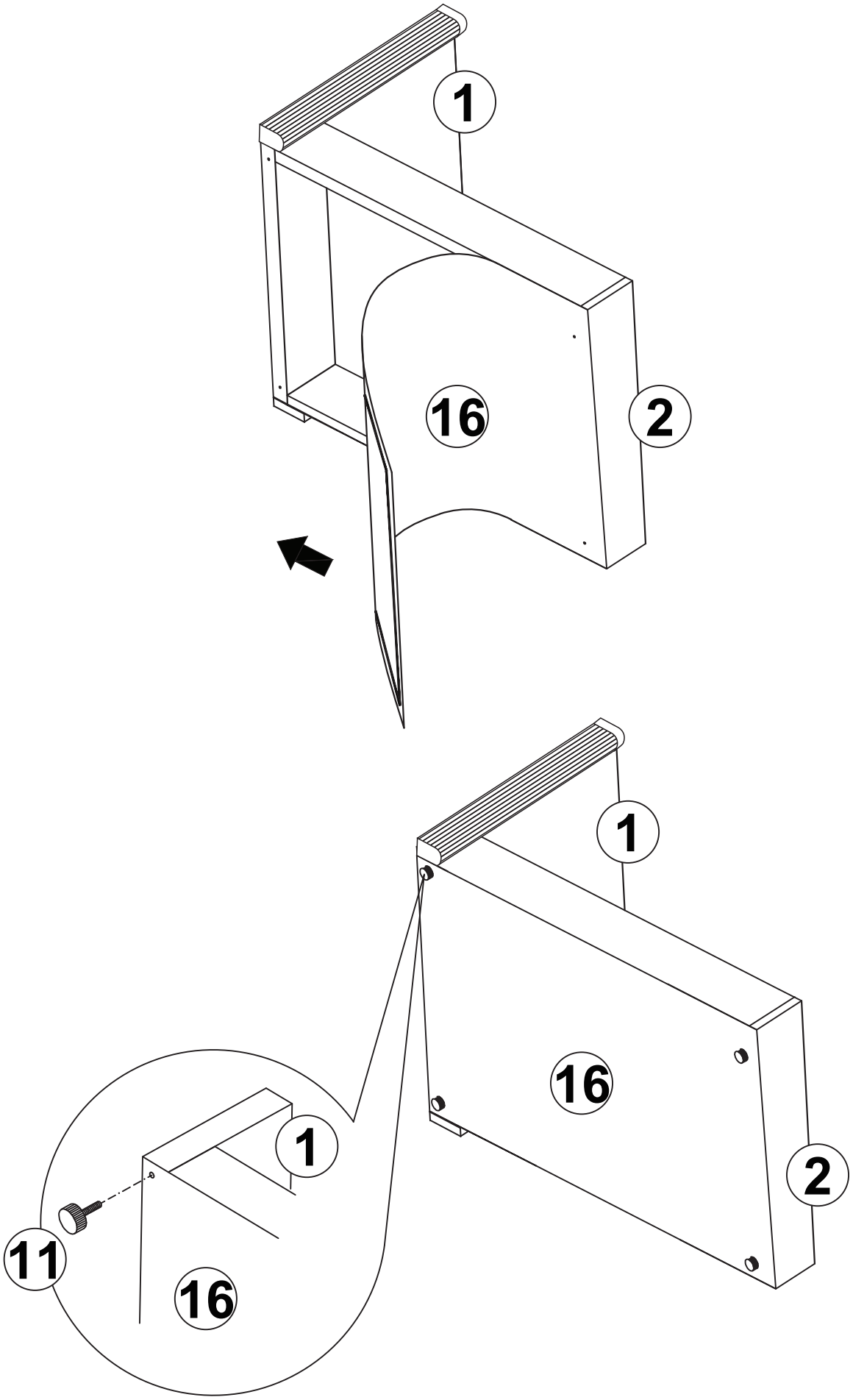

9

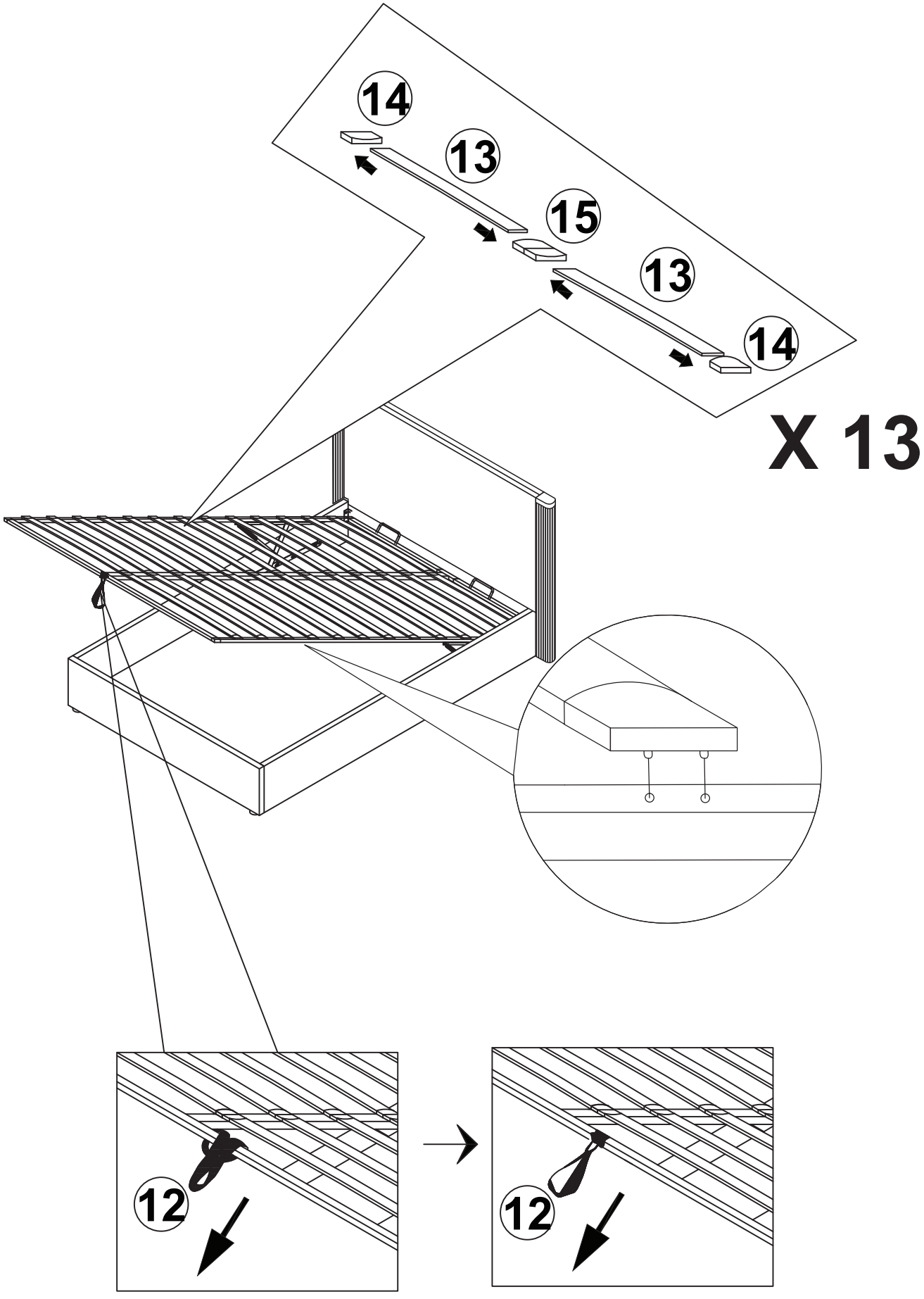

10

DOUBLE

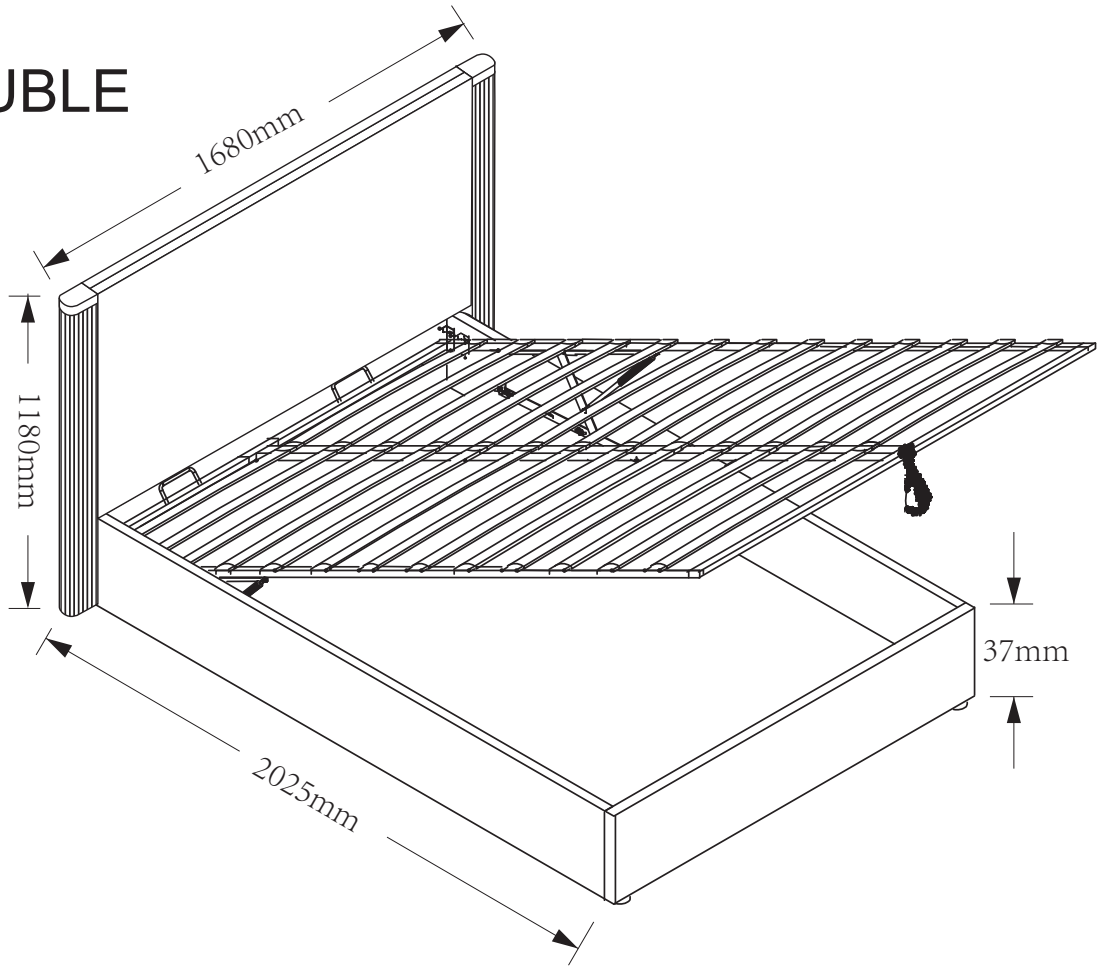

KING

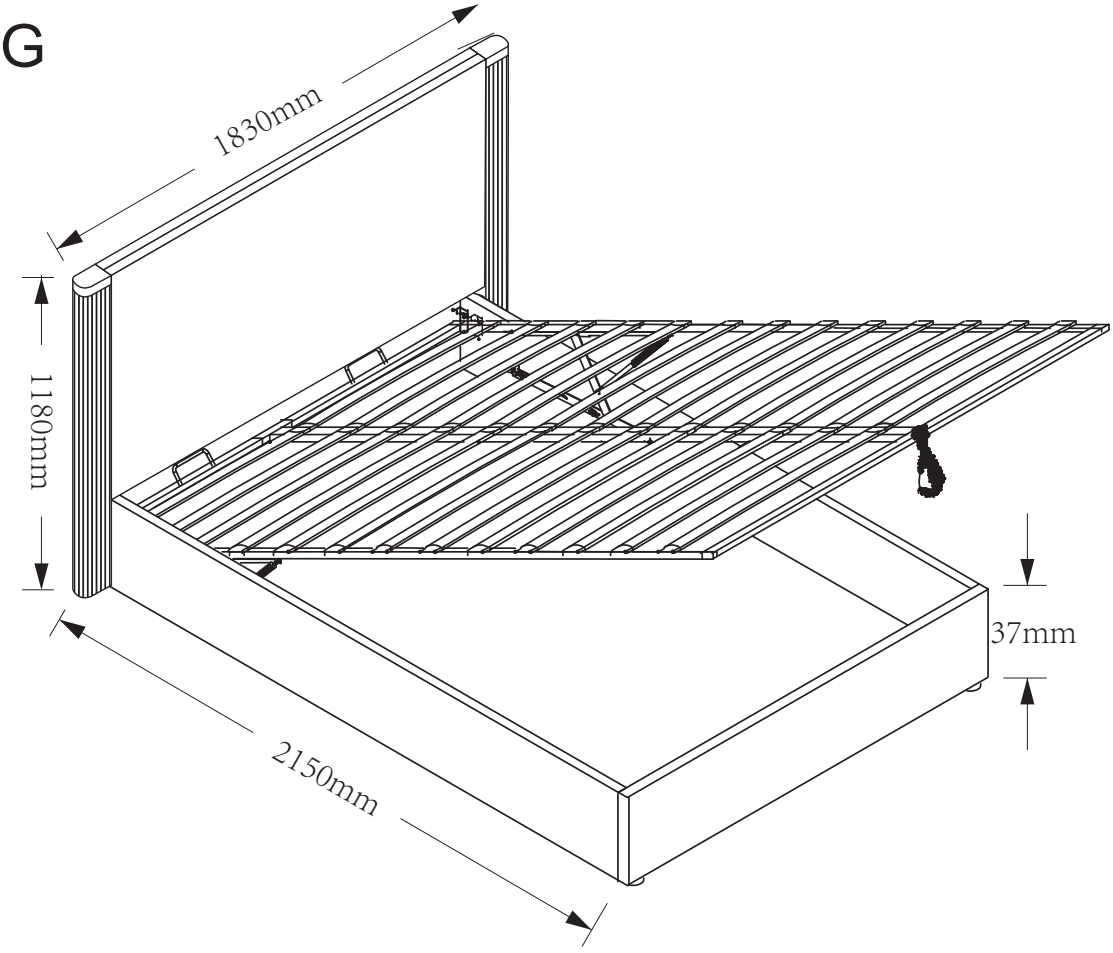

PRODUCT CARE

Thank you for choosing our furniture.

We hope it brings you lasting comfort and enjoyment. To maintain its beauty over time, we recommend the following care guidelines.

UPHOLSTERY

- Vacuum regularly with a soft brush attachment.
- Blot spills immediately with a clean, dry cloth.
- Use mild fabric cleaner for stains, test before use.
- Avoid direct sunlight to prevent fading.
- Do not use bleach or harsh chemicals.
- Keep from heat and sharp objects.
- Do not allow children to jump up and down on the furniture
- Avoid allowing pets on the upholstery as their claws may cause damage to the fabric.
- Do not sit on the arms (if present) or the front of the cushions as this mad deform the foam.
- In the case of significant damage or persistent stains, professional care is advised.

PAPER FOIL/ MELAMINE FINISH

- Clean with a soft, dry or slightly damp cloth.
- Wipe with a soft cloth; mild soap if needed.
- Dry after cleaning.
- Avoid abrasive pads and strong chemicals.
- Avoid excessive moisture.
- Protect from heat and sharp objects.
- Use protective pads for hot items.

GENERAL CARE

- Avoid dragging objects across surfaces as this can cause scratching and marks.
- Use coasters and protective pads to protect from damage by drinks and food.

NOTICE: For pre-assembled items such as chairs, regular checks are advised to ensure all fittings remain secure over time.

FOR PARTS & TECHNICAL SUPPORT VISIT

Telephone: 01924950108

Email Address: support@bedkingdom.co.uk

Manufacturer

Flair Furniture Ltd

Old Delivery Office, Oldfield Lane,

Heckmondwike, England, WF16 0JD

support@bedkingdom.co.uk

01924 950108

EU Responsible (for authorities only)

eucomply OÜ

Pärnu mnt 139b-14

11317 Tallinn, Estonia

hello@eucompliancepartner.com

+3375690241