SOLACE+CO

Care Instructions

Please periodically check all fittings and re-tighten as necessary.

Upholstered furniture should not be exposed to direct sunlight for long periods.

Please do not place your upholstery in direct contact with a strong heat source. Leave a 30cm gap between upholstery and radiators.

Please do not allow children to jump up and down on the upholstery.

Avoid allowing pets on the upholstery as their claws may cause damage to the fabric.

Avoid sitting on the arms of the upholstery or on the front edge of the seat as this can compress the foam and damage the frame of your upholstery causing premature wear and distortion.

When your new sofa arrives, you may notice that some of the seating or back padding may have been creased or squashed during transit.This can be simply corrected by gently patting back into shape to re-distribute the filling and reshape the covering.

Please note that this product should never be used other than as a sofa -it is not a bed and should not be used as a substitute for a bed.

Our fixed cover fabric sofas can be cleaned by using water and a neutral soap to remove stains, Always apply the treatment to a concealed area first to test for colourfastness.

Light vacuuming of the sofa will help to prolong the life of the covers, Be very careful, as some vacuum attachments have sharp edge that could damage your sofa.

In the unfortunate event of severe staining on the fabric,take expert advice from a specialist upholstery cleaning company before attempting to clean or remove the stain.

FOR PARTS & TECHNICAL SUPPORT	Manufacturer	EU Responsible (for authorities only)
VISIT:	Flair Furnishings Ltd t/a Bedkingdom,	eucomply OÜ
Telephone:	Old Delivery Office, Oldfield Lane,	Pärnu mnt 139b-14
01924950108	Heckmondwike, England, WF16 0JD	11317 Tallinn, Estonia
Email Address:	Support@bedkingdom.co.uk	hello@eucompliancepartner.com
support@bedkingdom.co.uk	01924 950108	+3375690241

Expanding Step Diagrams

STEP:1

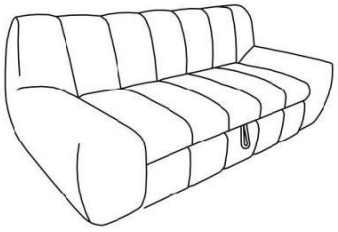

STEP:2

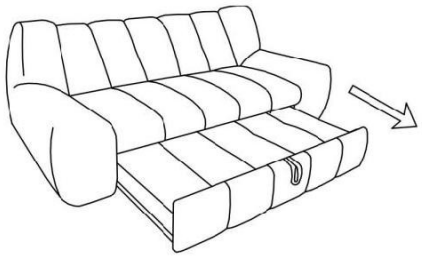

STEP:3

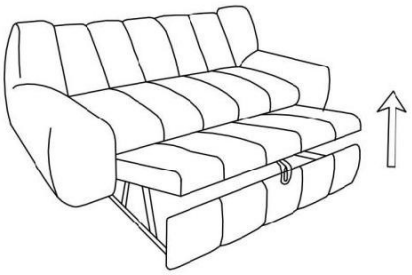

STEP:4

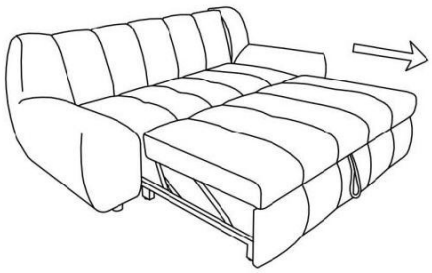

STEP:5

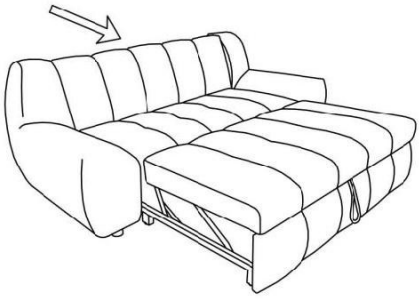

STEP:6

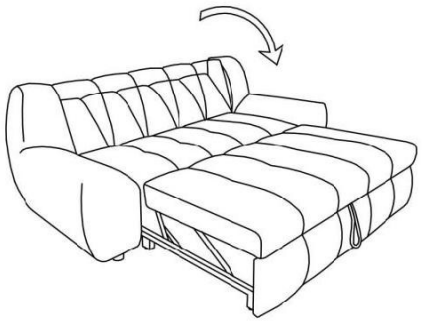

STEP:7

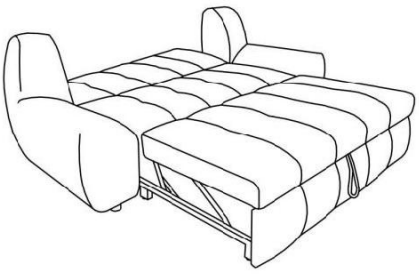

STEP:8

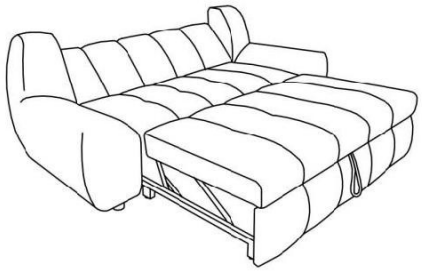

Retraction Step Diagrams

STEP:1

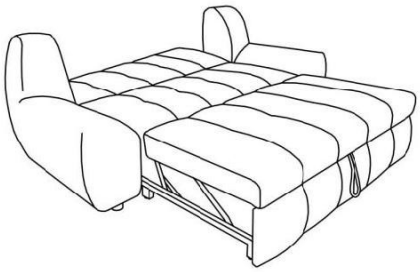

STEP:2

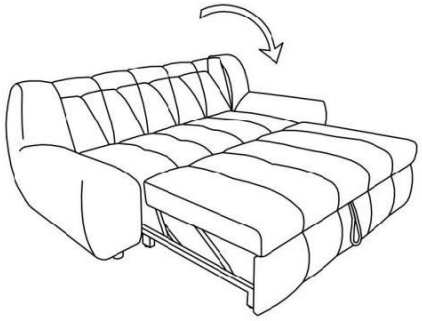

STEP:3

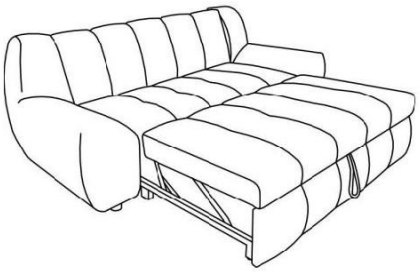

STEP:4

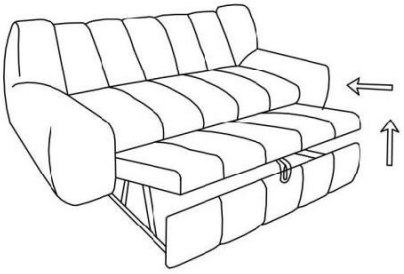

STEP:5

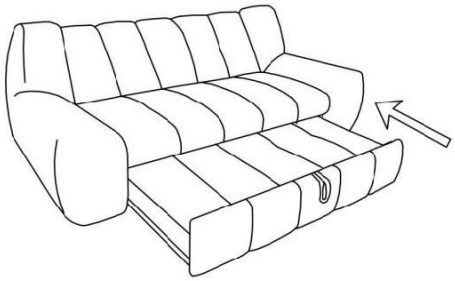

STEP:6

