IMPORTANT! RETAIN FOR FUTURE REFERENCE

Maddy 4 Poster King Bed with Drawers

Assembly Instructions

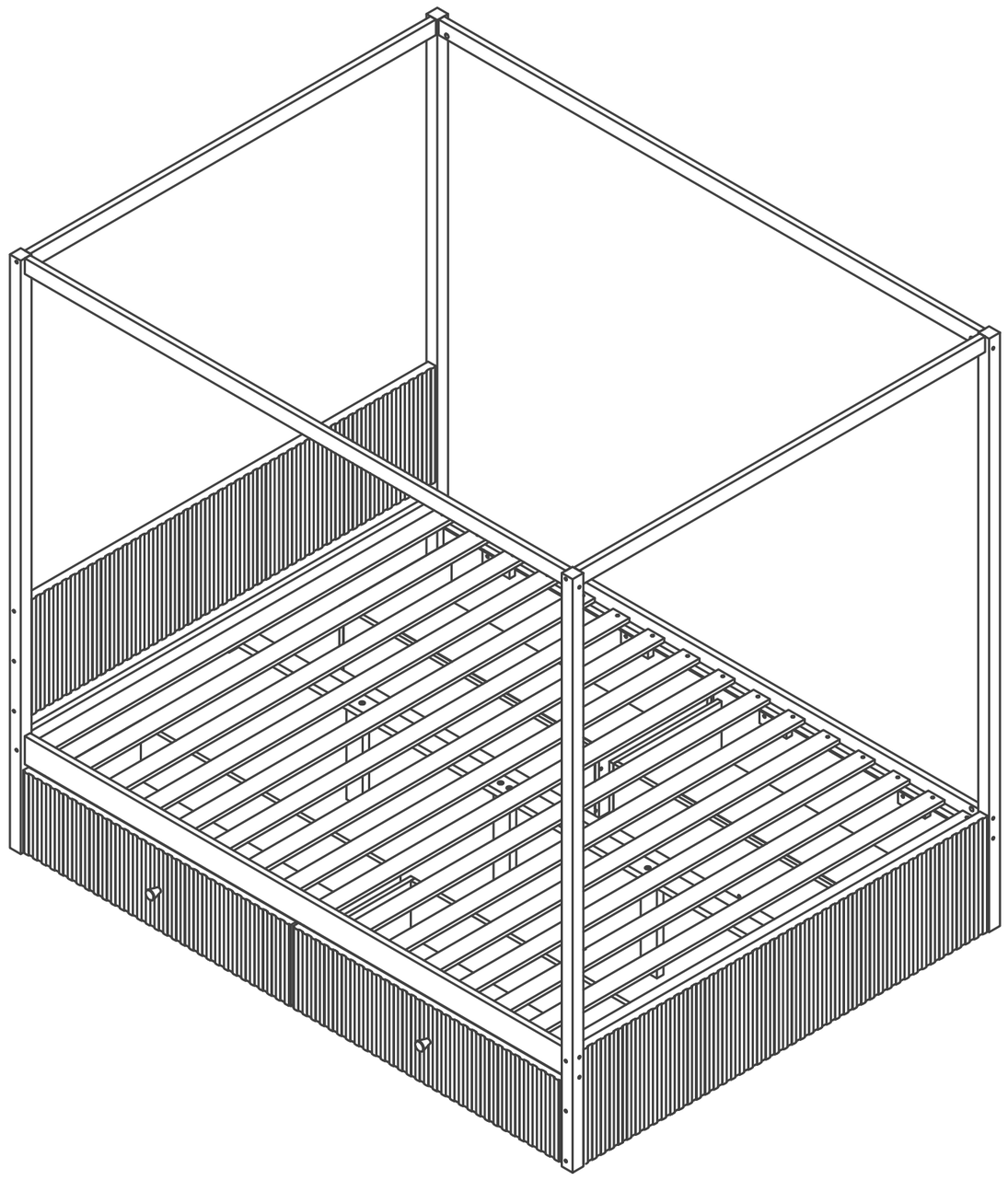

Dimensions: 208 x 158 x 190 cm

For parts and Technical Support contact:

Telephone 01924950108

E- Mail support@bedkingdom.co.uk

Tools required (not supplied)

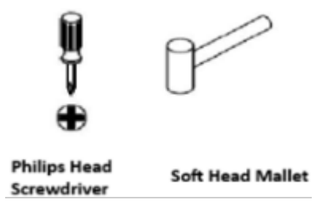

2 Person assembly recommended



x 2

120 Minute (Approx.) for assembly

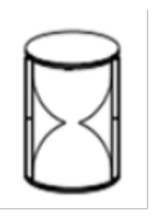

Produced in China for Flair Furniture Ltd t/a bedkingdom.co.uk

INFORMATION and WARNINGS

IMPORTANT – READ CAREFULLY.

CAUTION: There are small components used in the construction of this unit. These loose items should be kept away from young children whilst assembling your unit to avoid the danger of choking hazards.

INFORMATION:

- ☐ Importer – Flair Furniture LTD, Oldfield Lane, Heckmondwike, West Yorkshire, England, WF16 0JD
- ☐ Due to the size of this product, we recommend that is assembled in the room intended for use.
- ☐ When you are ready to start, make sure that you have the right tools, plenty of space and clean, dry area for assembly.
- ☐ Unwrap all packaging materials and place each component on top of the carton box or on a clean floor to prevent from scratching.
- ☐ Check the pack and make sure you have all the parts listed.
- ☐ Tools are not included unless specified in the parts list.
- ☐ Ensure that this product is fully assembled as illustrated before use.
- ☐ Please keep the assembly instruction for future reference.
- ☐ If for any reason you need to return this item, you must return in original packaging. Please be note that assembled items cannot be returned.
- ☐ The recommended size mattress for this bed is 150cm x 200cm.

WARNING:

- ☐ Always follow the manufacturer's instructions.
- ☐ This product should only be used on firm, level floor.
- ☐ Do Not use power tools to construct this product as this may invalidate your warranty.
- ☐ Do Not over tighten the screw or bolts.
- ☐ Do Not fully tighten screw until the product is fully assembled.

BEFORE YOU START:

- ☐ Check that this is the item you order especially the correct colour.
- ☐ DO NOT throw away the packaging until you are sure you are keeping the bed
- ☐ Double check you have all the parts before starting using the parts list in the in these instructions and that there is no damage.
- ☐ If you decide to return your bed please repack in the original packaging, wrapping all parts including all the hardware and securely tape seal the box(es). DON'T be afraid to use lots of tape.



WARNING USING POWER TOOLS TO ASSEMBLE THIS BED IS STRONGLY UNADVISED AS IT MAY BE UNSAFE THE USE OF THESE WILL INVALIDATE ANY CLAIM.

Produced in China for Flair Furniture Ltd t/a bedkingdom.co.uk

Part List : 1

1 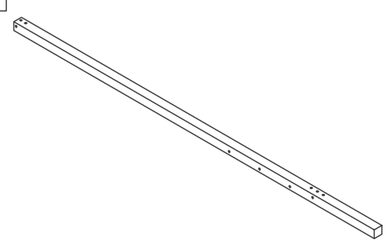 1PC	2 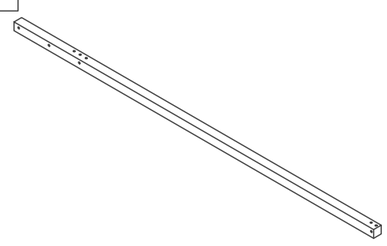 1PC	3 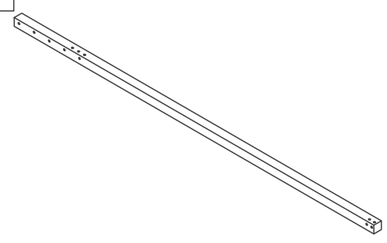 1PC	4 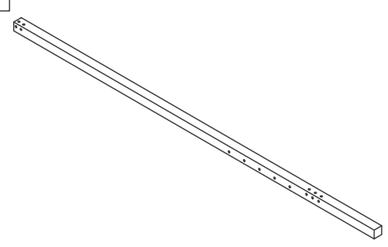 1PC
5 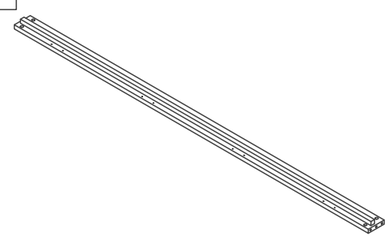 2PCS	6 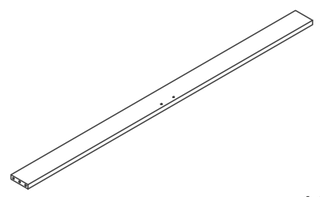 1PC	7 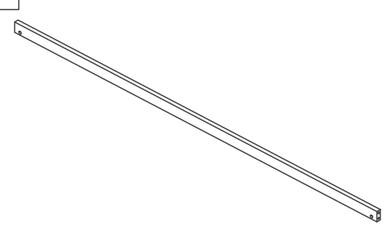 2PCS	8 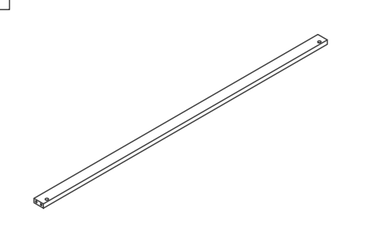 2PCS
9 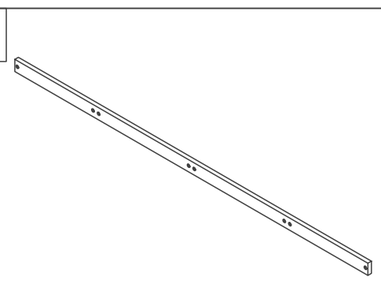 1PC	10 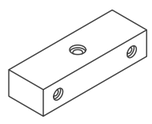 2PCS	11 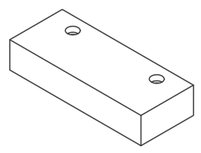 8PCS	12 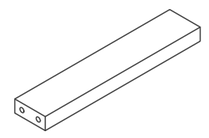 3PCS
16 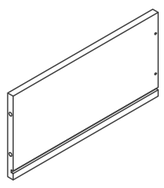 4PCS	17 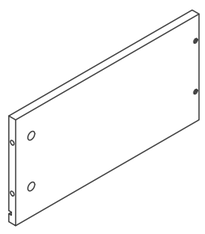 4PCS		

Part List : 2

13 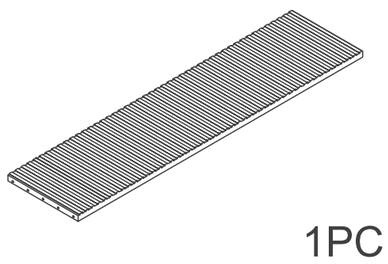 1PC	14 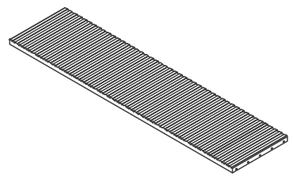 1PC	20 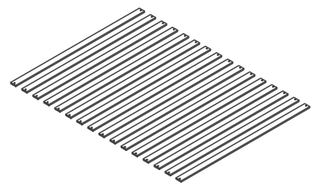 1PC	K 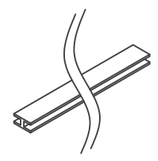 4PCS

Part List : 3

15 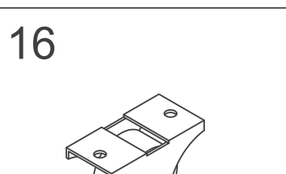 4PCS	18 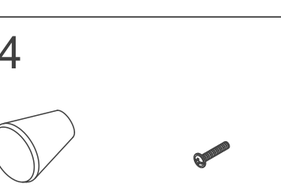 4PCS	19  4PCS	21  8PCS

Hardware List

A x 30 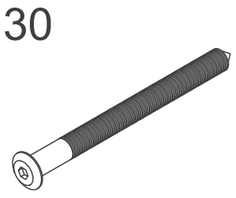 M6x80	B x 24 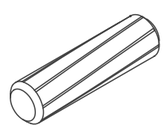 Φ8x30	C x 30  Φ10x12	D x 66 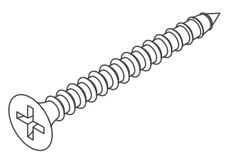 Φ4x30
E x 8 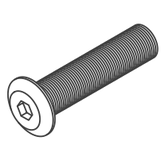 Φ6x30	F x 4 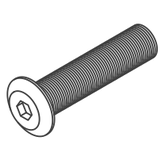 Φ6x40	G x 20 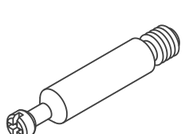 G1  G2	H x 32 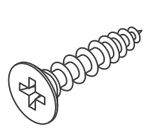 Φ3.5x15
J x 16	L x 4 L1 L2	M x 1	

PARTS DIAGRAM

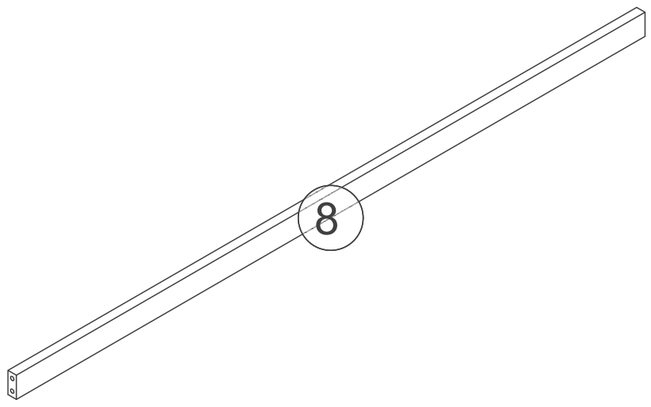

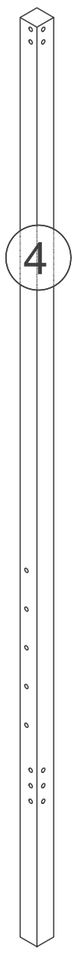

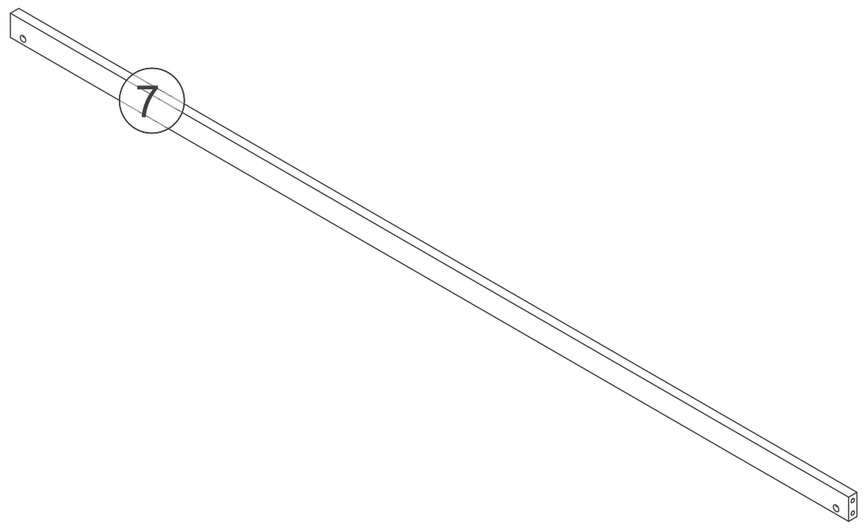

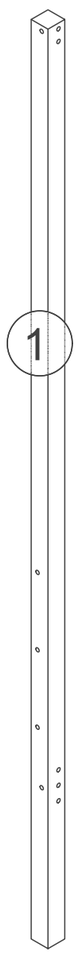

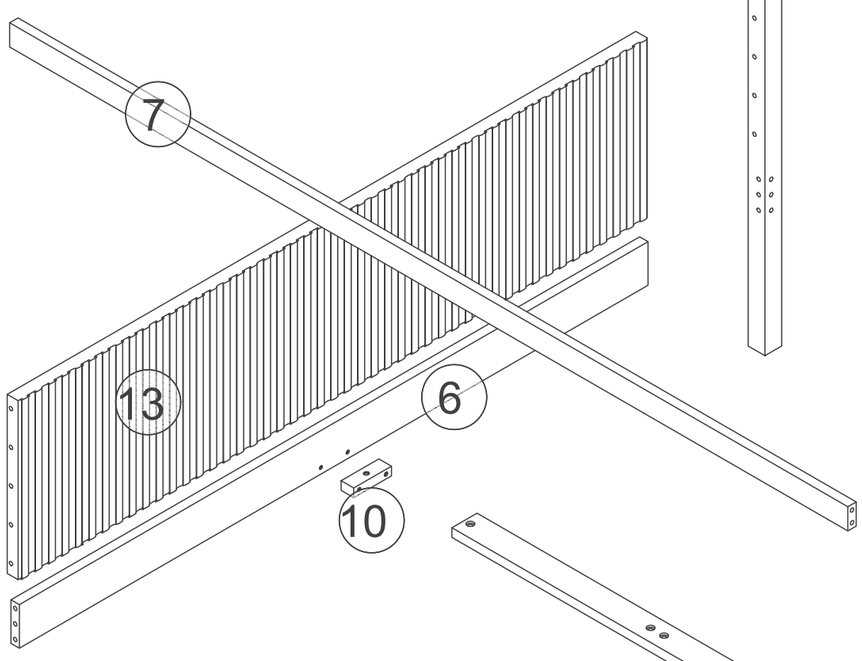

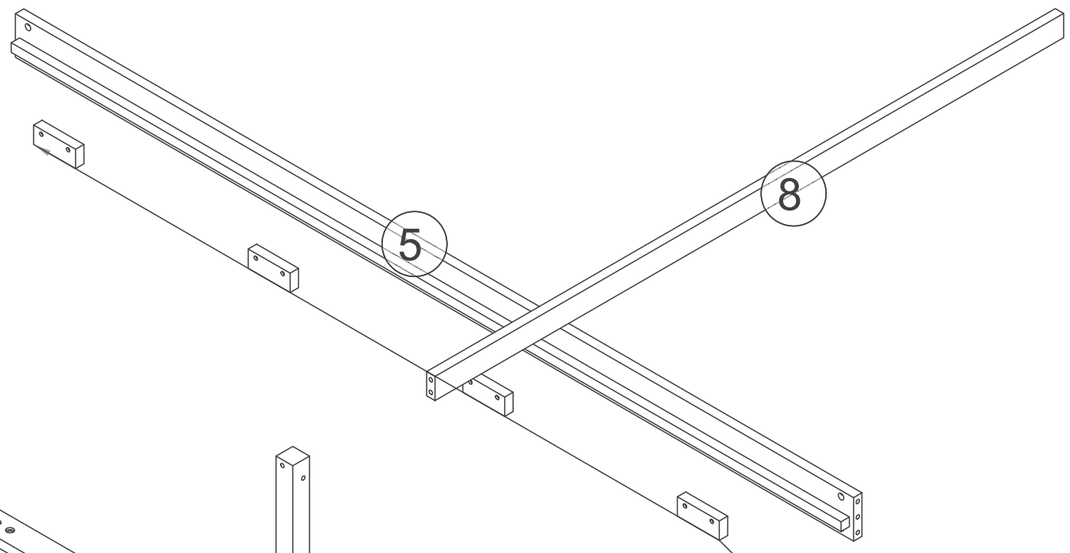

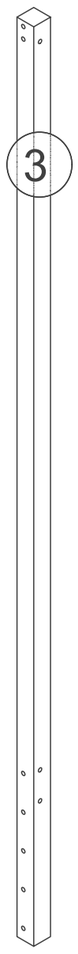

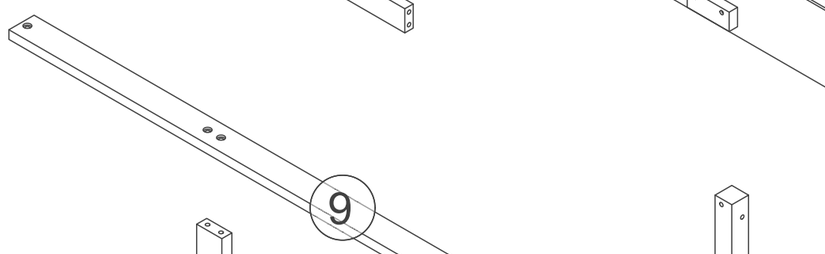

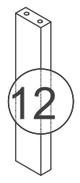

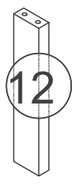







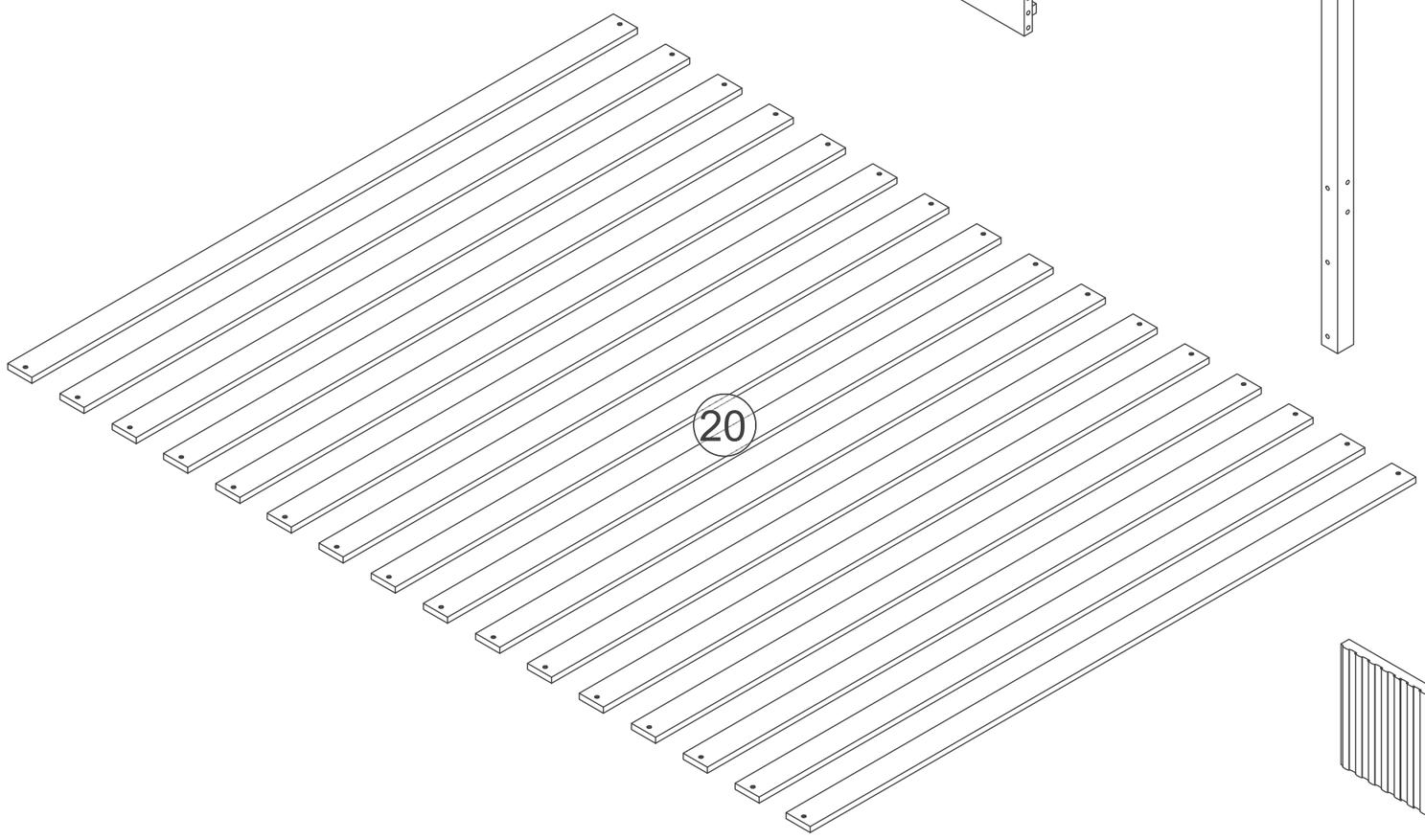

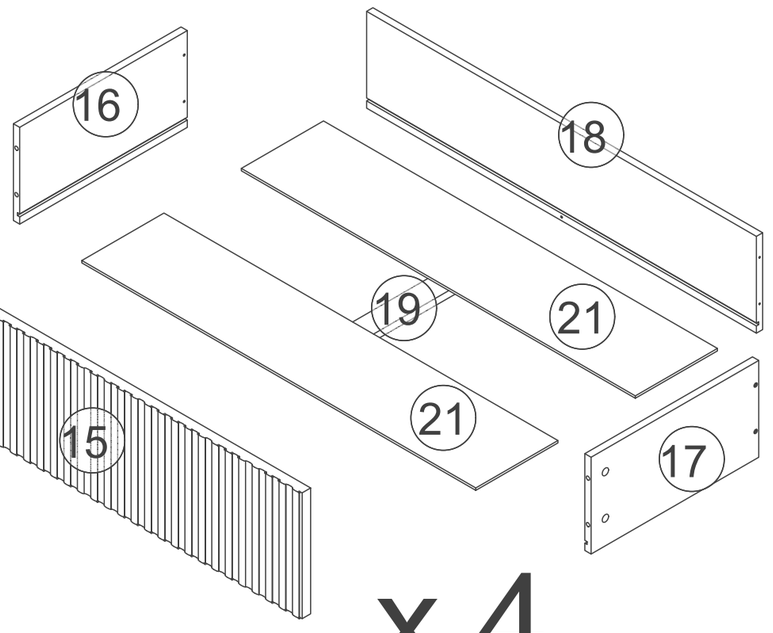

STEP:1

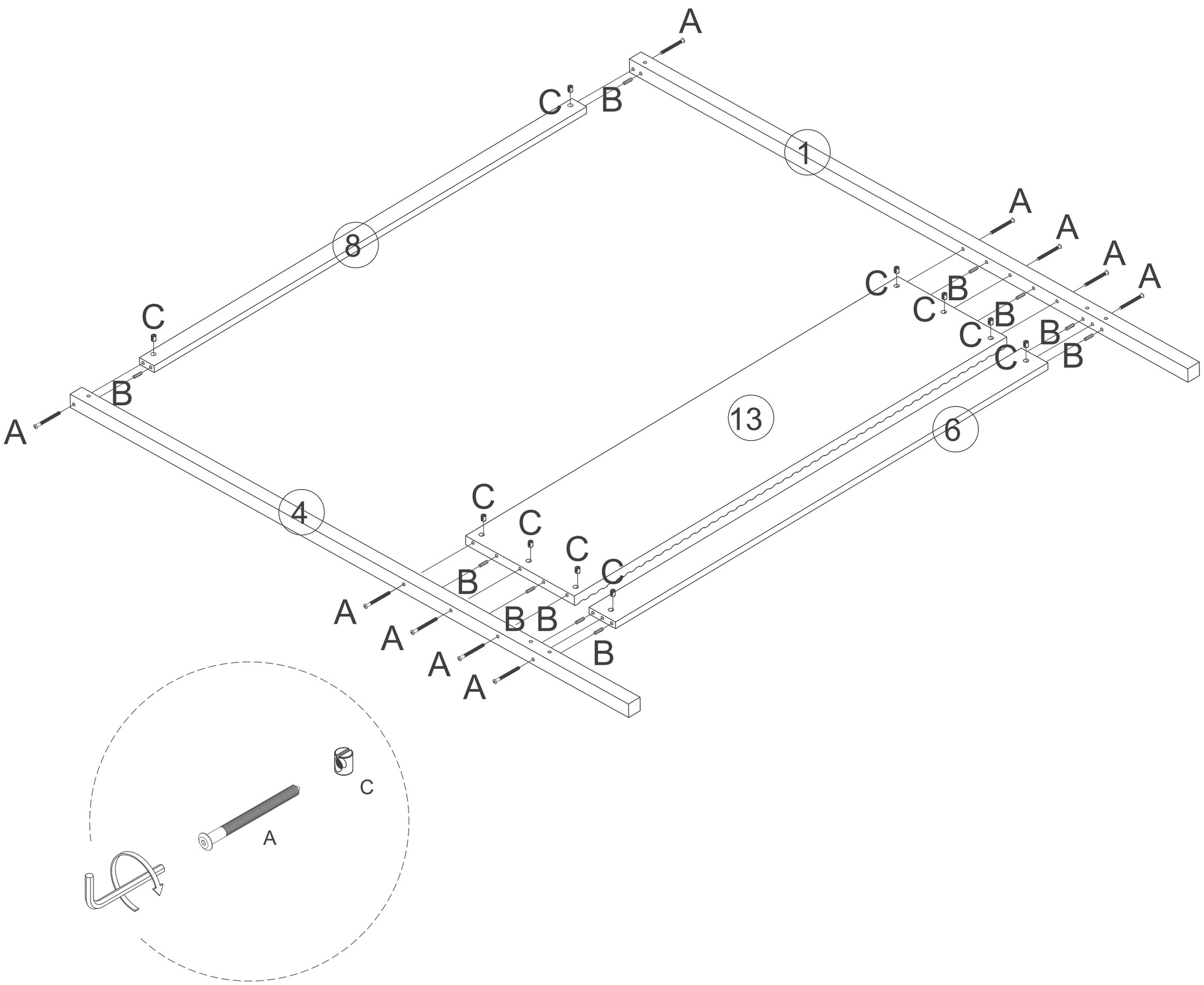

A x 10	B x 10	C x 10
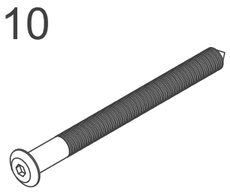 M6x80	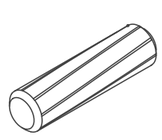 Φ8x30	 Φ10x12

STEP:2

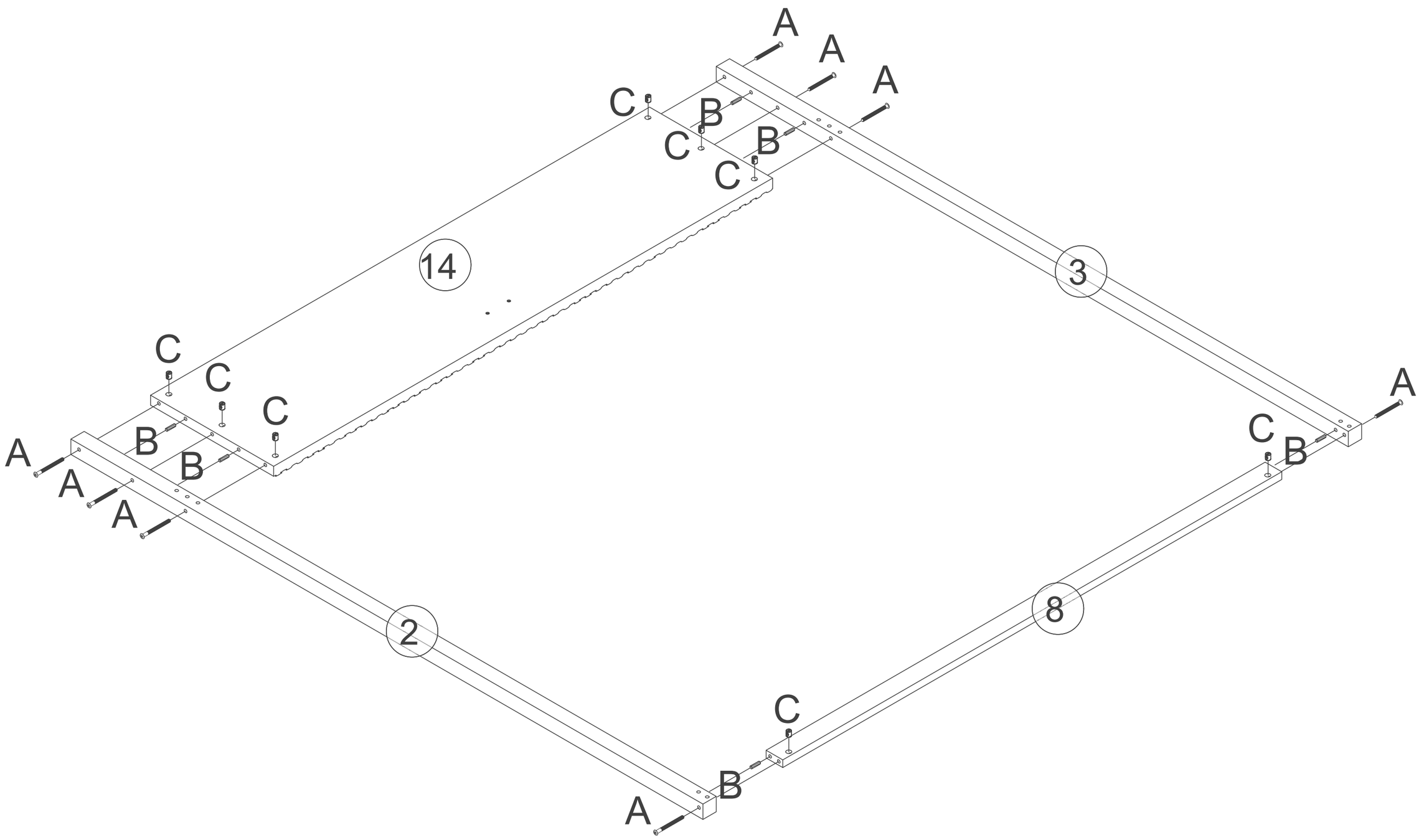

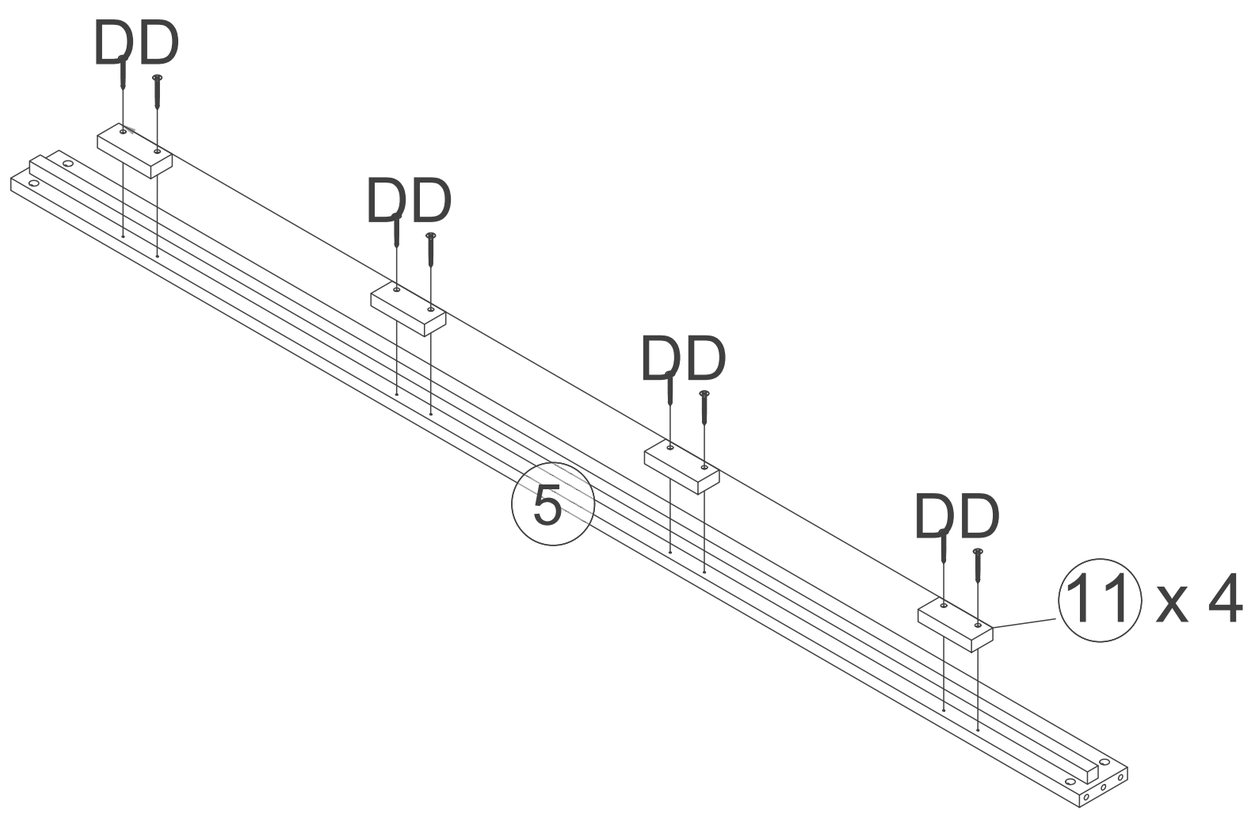

x 2

A x 8	B x 6	C x 8	D x 16
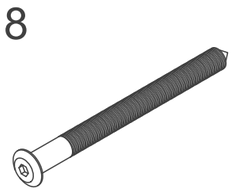 M6x80	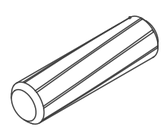 Φ8x30	 Φ10x12	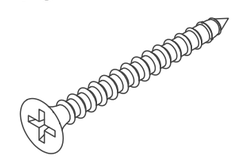 Φ4x30

STEP:3

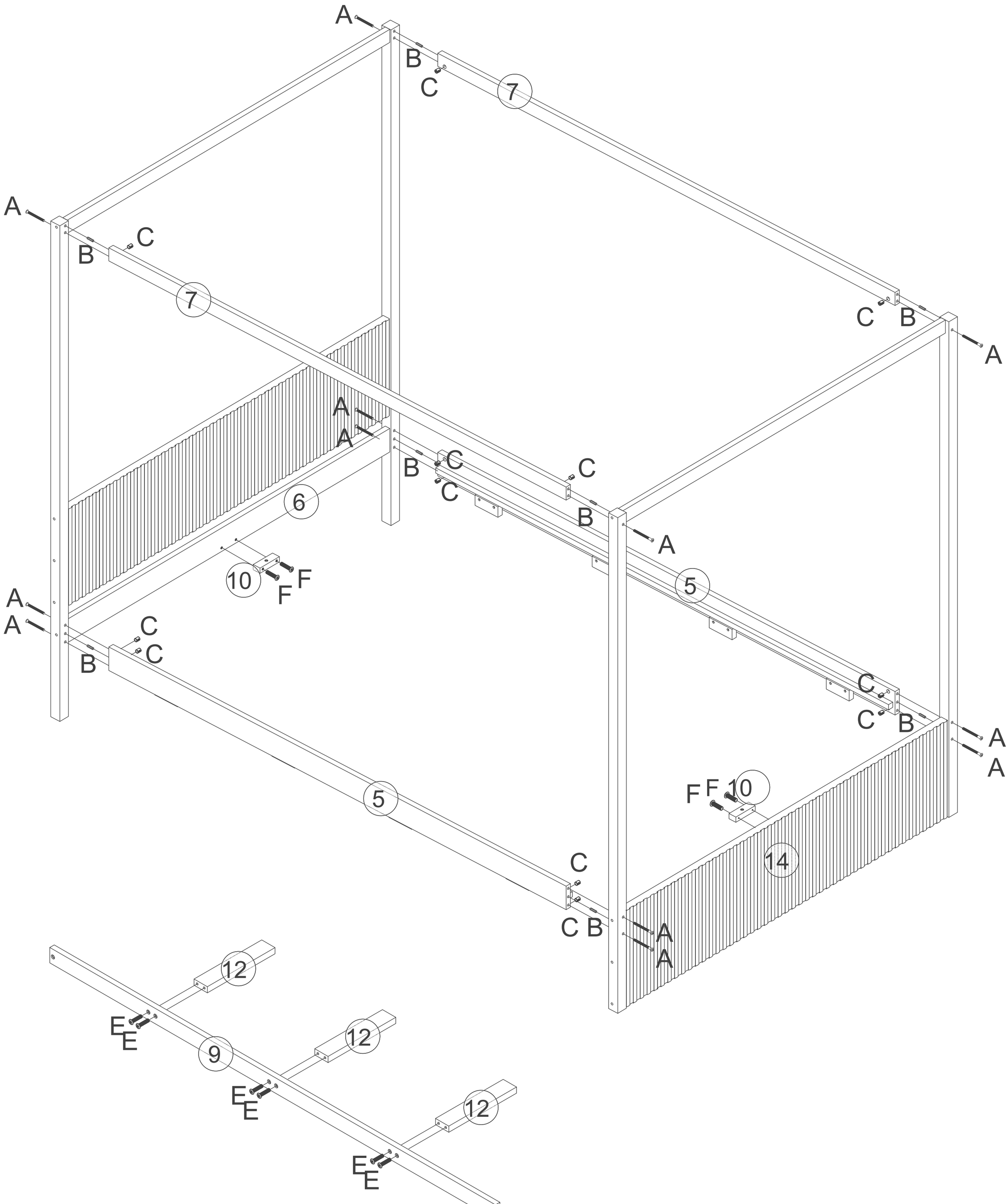

A x 12	B x 8	C x 12	E x 6	F x 4
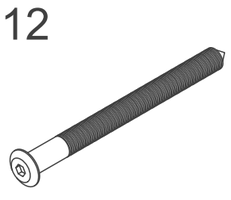 M6x80	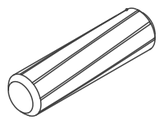 Φ8x30	 Φ10x12	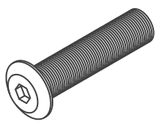 Φ6x30	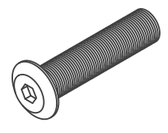 Φ6x40

STEP:4

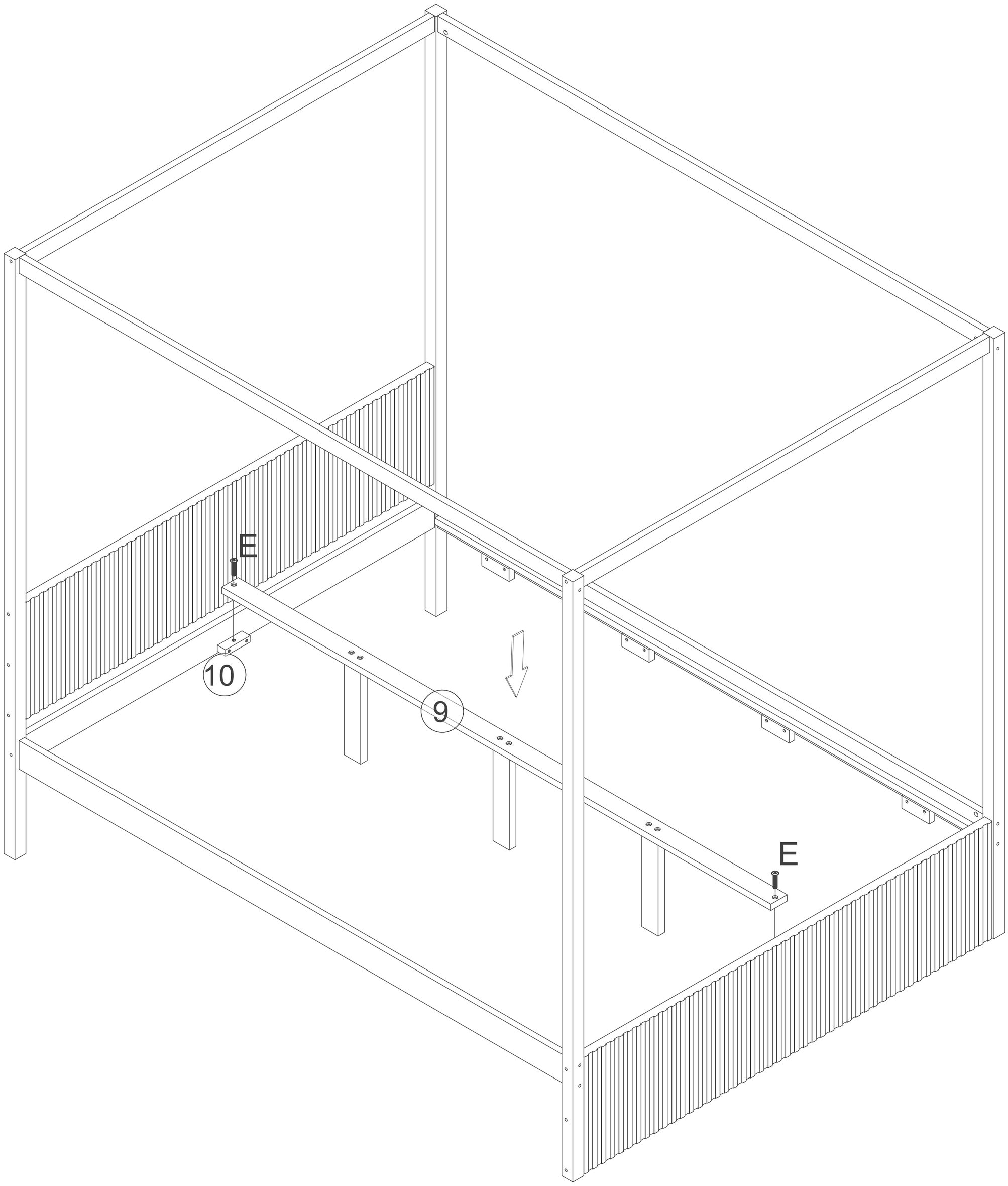

E x 2

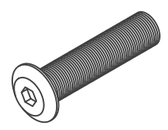

Φ6x30

STEP:5

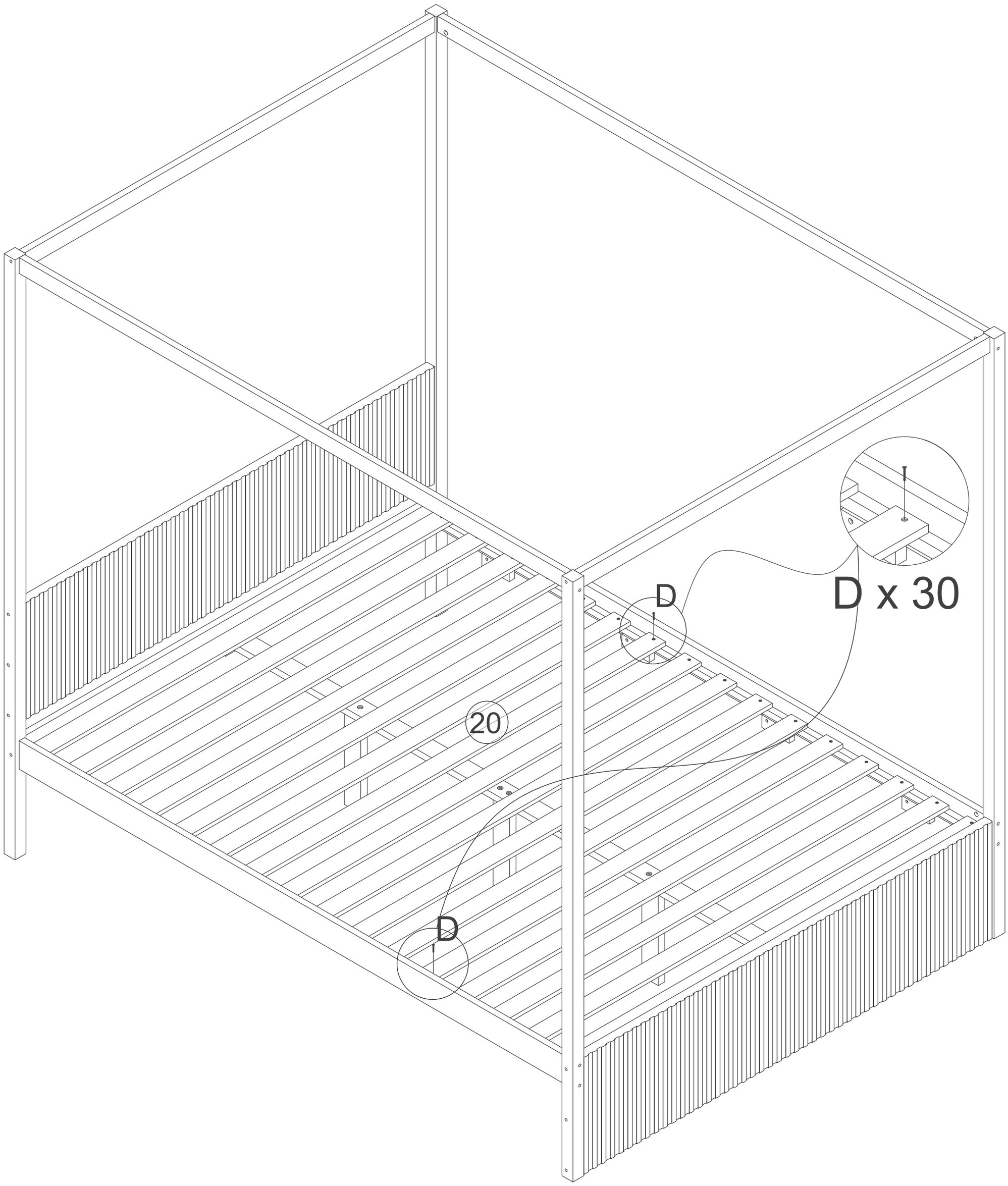

D x 30

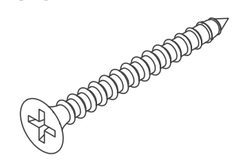

Φ4x30

STEP:6

x 4

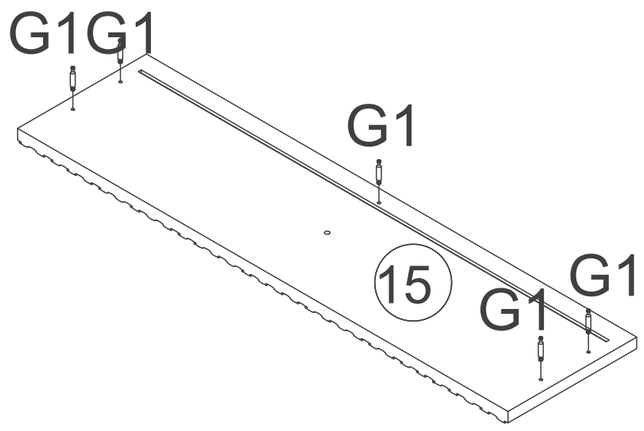

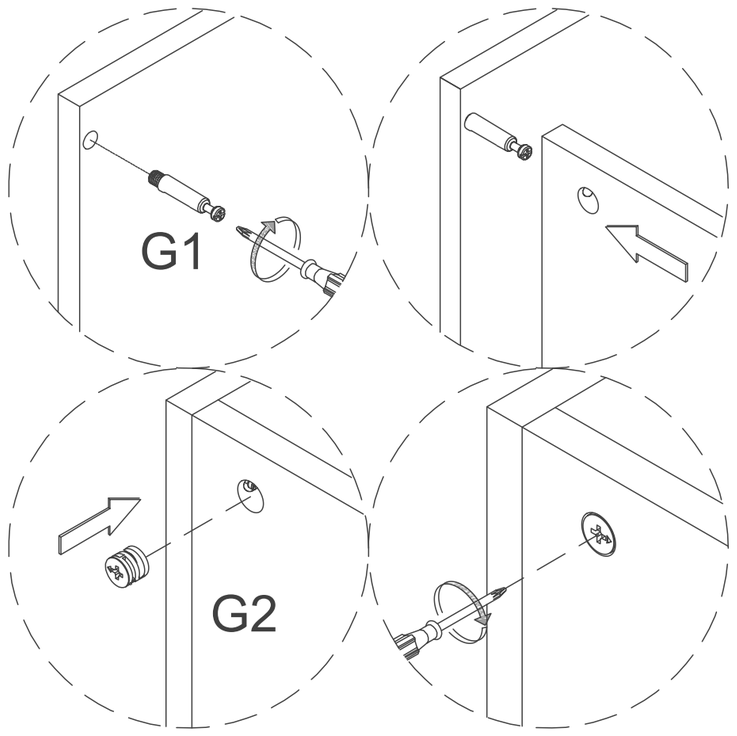

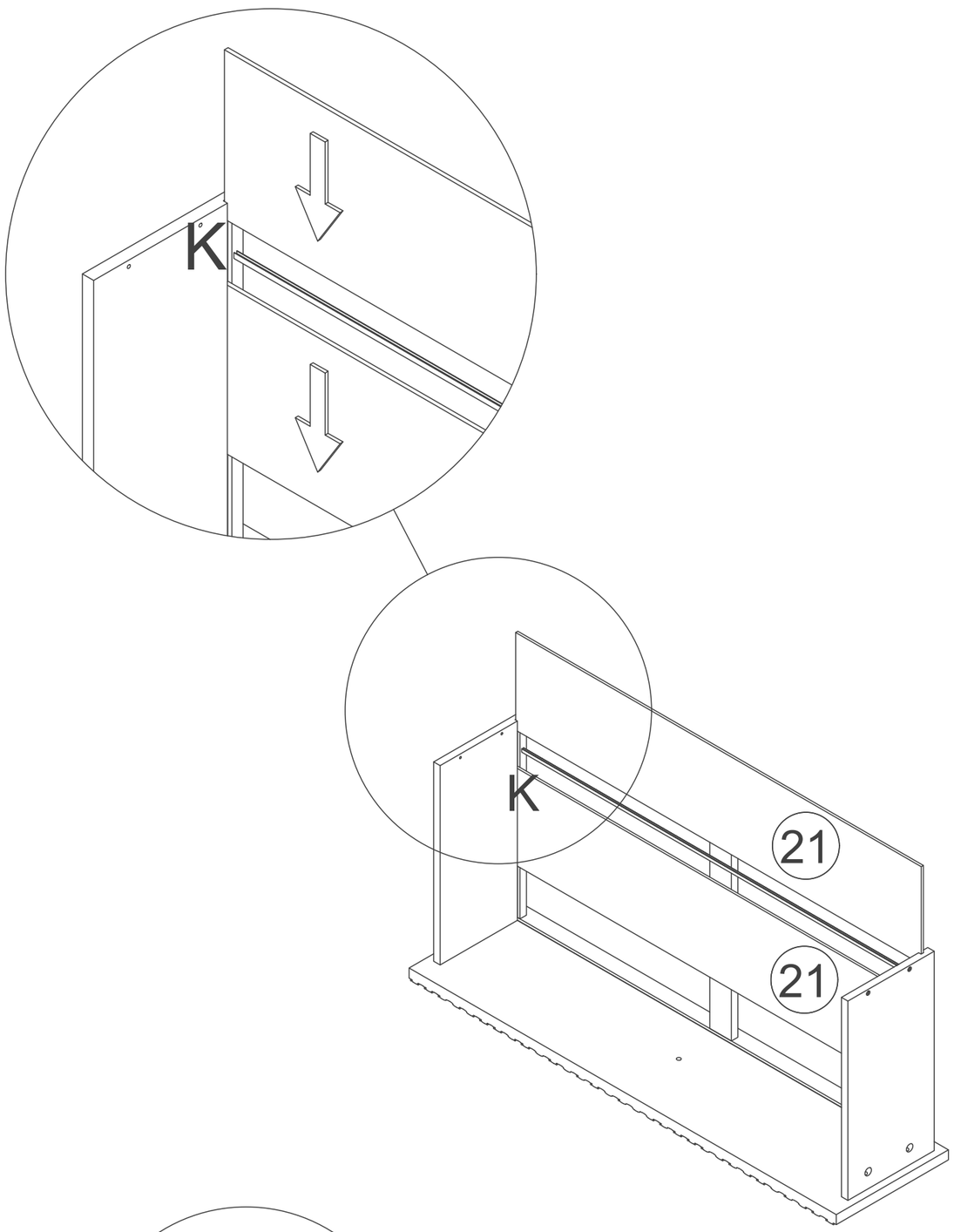

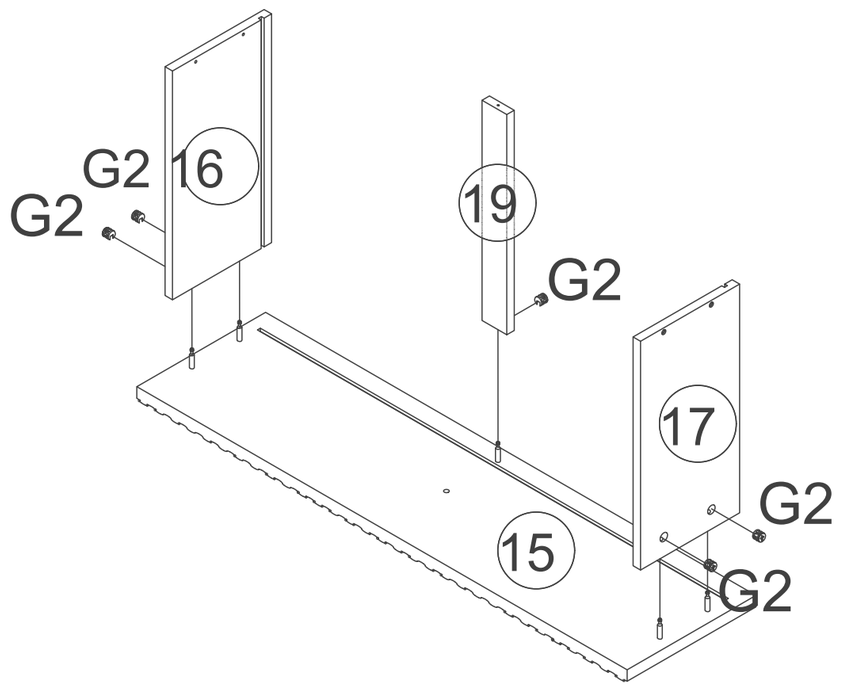

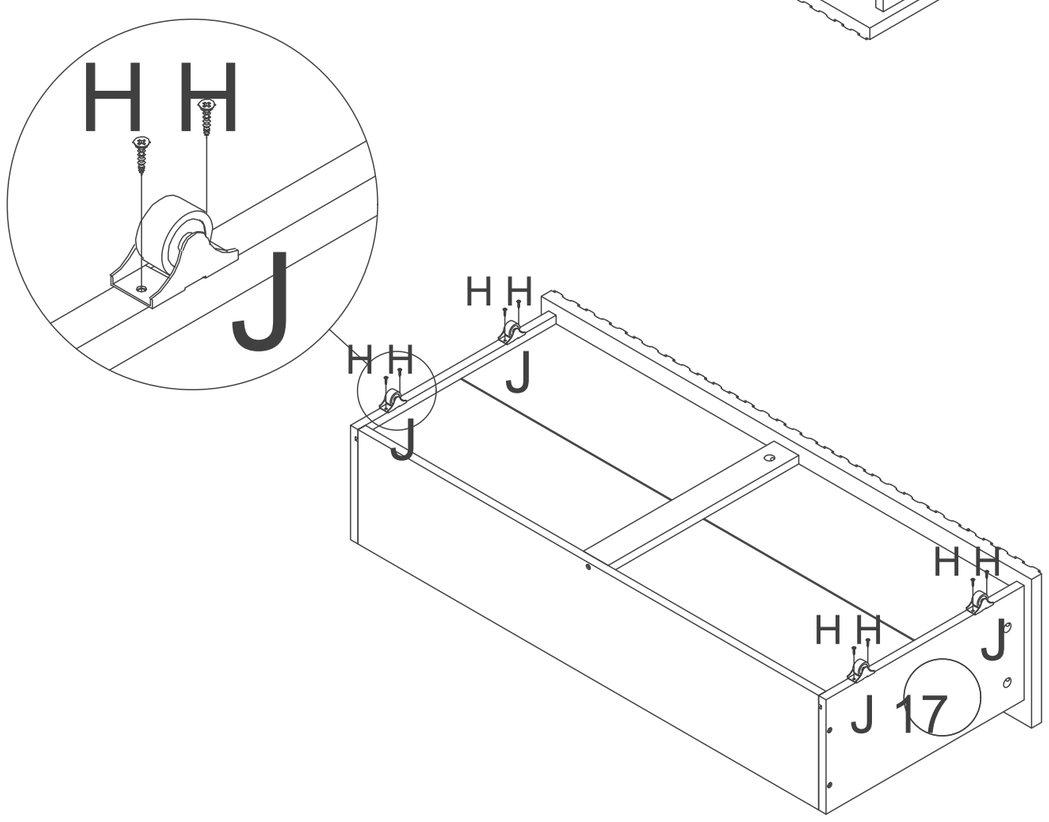

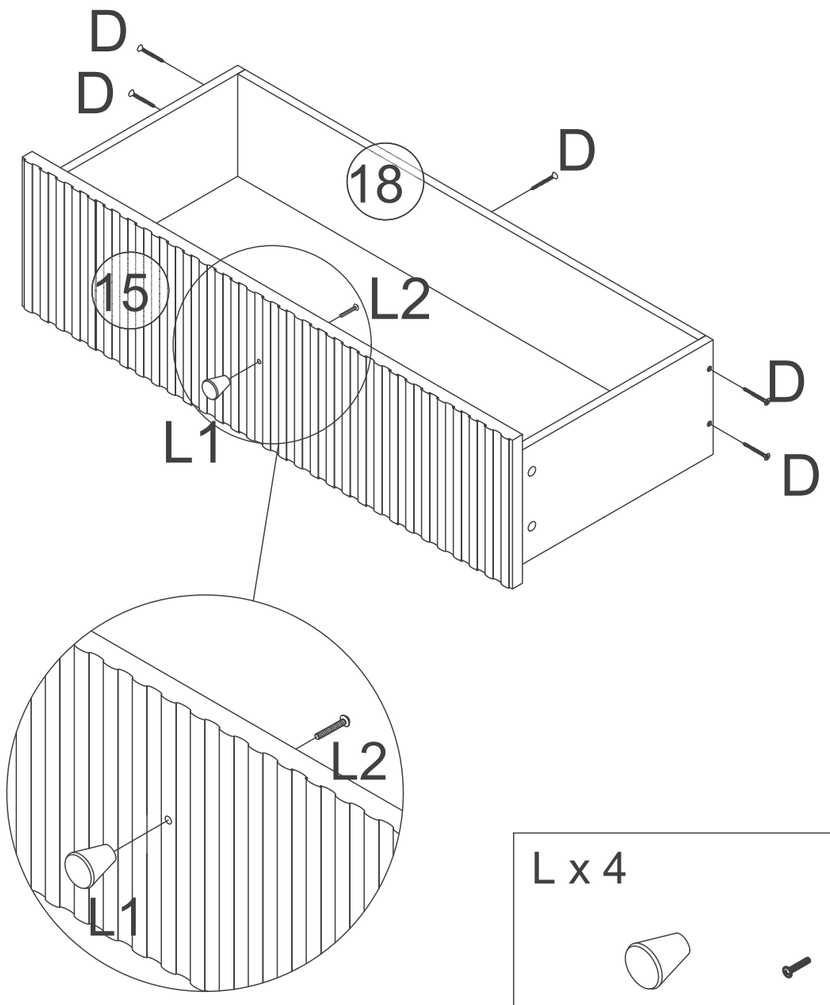

L x 4

D x 20

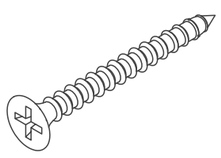

Φ4x30

G x 20

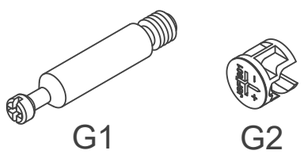

H x 32

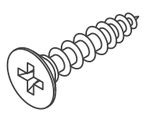

Φ3.5x15

J x 16

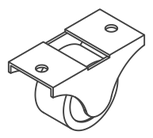

K x 4

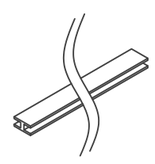

STEP:7

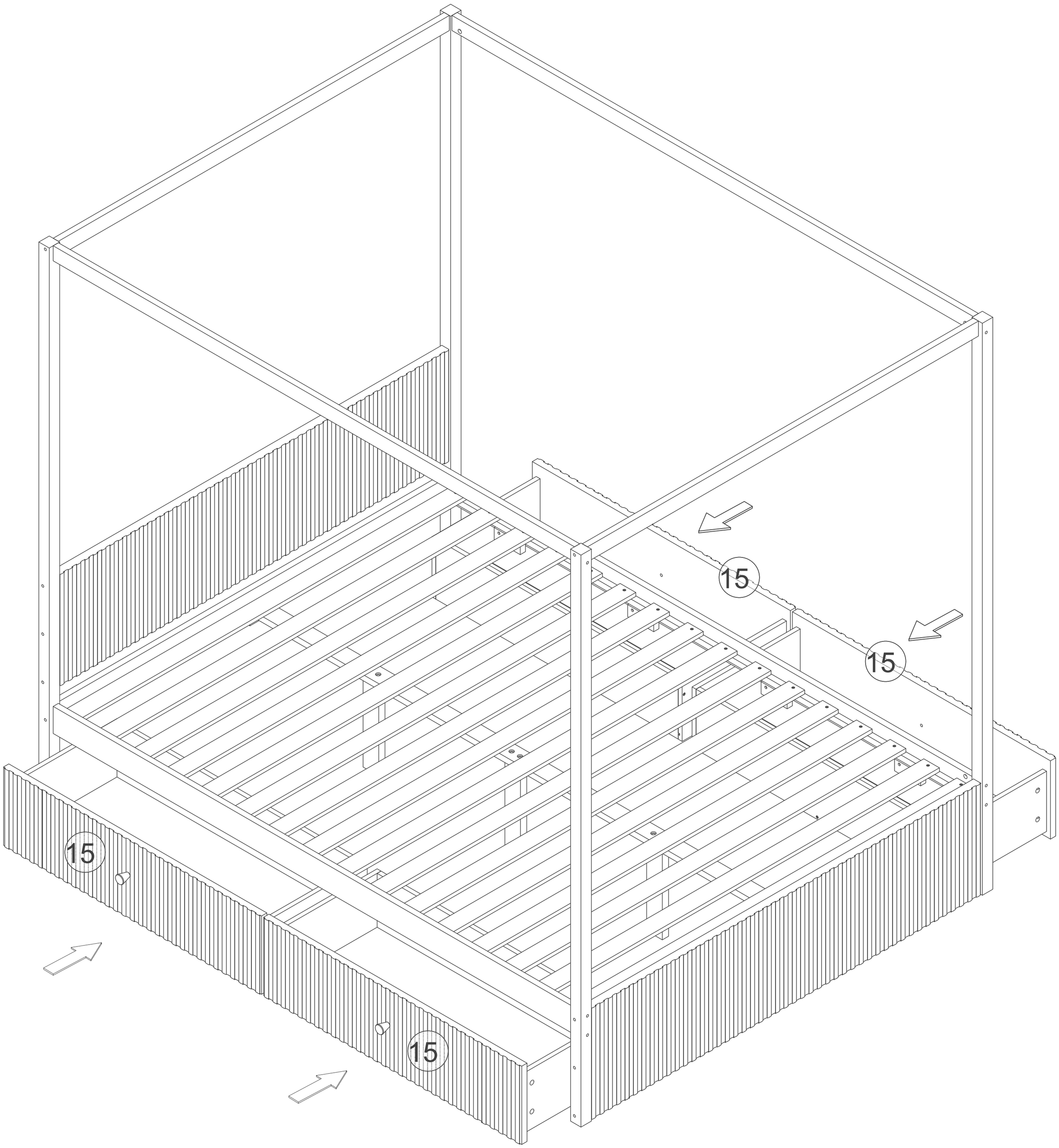

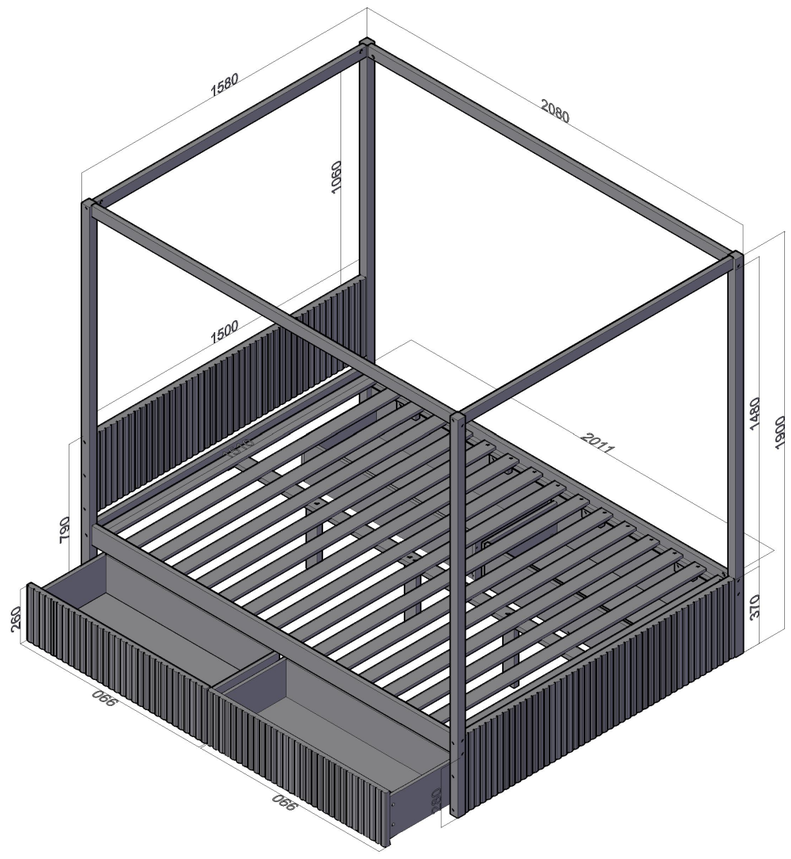

Please dispose of packaging safely and responsibly.

Care &Maintenance of Your Product.

- ☐ Tighten all screws periodically to guarantee they are secure.
- ☐ Clean with a soft, dry or slightly damp cloth.
- ☐ Wipe with a soft cloth; mild soap if needed.
- ☐ Dry after cleaning.
- ☐ Avoid abrasive pads and strong chemicals.
- ☐ Avoid excessive moisture.
- ☐ Protect from heat and sharp objects as they can damage to wood.
- ☐ Use protective pads for how items.
- ☐ To move the product lift it into place. Pushing or dragging the product across a floor will cause damage to it. If these guidelines are not followed it may invalidate the warranty.
- ☐ Note. This product has been designed to be as easy to assemble as possible. In the event that you run into issues putting the bed together or have damaged / missing pieces, please contact us:

FOR PARTS & TECHNICAL SUPPORT VISIT:
Telephone:
01924950108
Email Address:
support@bedkingdom.co.uk

Manufacturer
Flair Furnishings Ltd t/a Bedkingdom,
Old Delivery Office, Oldfield Lane,
Heckmondwike, England, WF16 0JD
support@bedkingdom.co.uk
01924 950108

EU Responsible (for authorities only)
eucomply OÜ
Pärnu mnt 139b-14
11317 Tallinn, Estonia
hello@eucompliancepartner.com
+3375690241

Produced in China for Flair Furniture Ltd t/a bedkingdom.co.uk