IMPORTANT! KEEP FOR FUTURE REFERENCE

Flair furnishings

FLAIR CALLAN BLACK METAL SMALL DOUBLE BED WITH STORAGE

Assembly Instructions

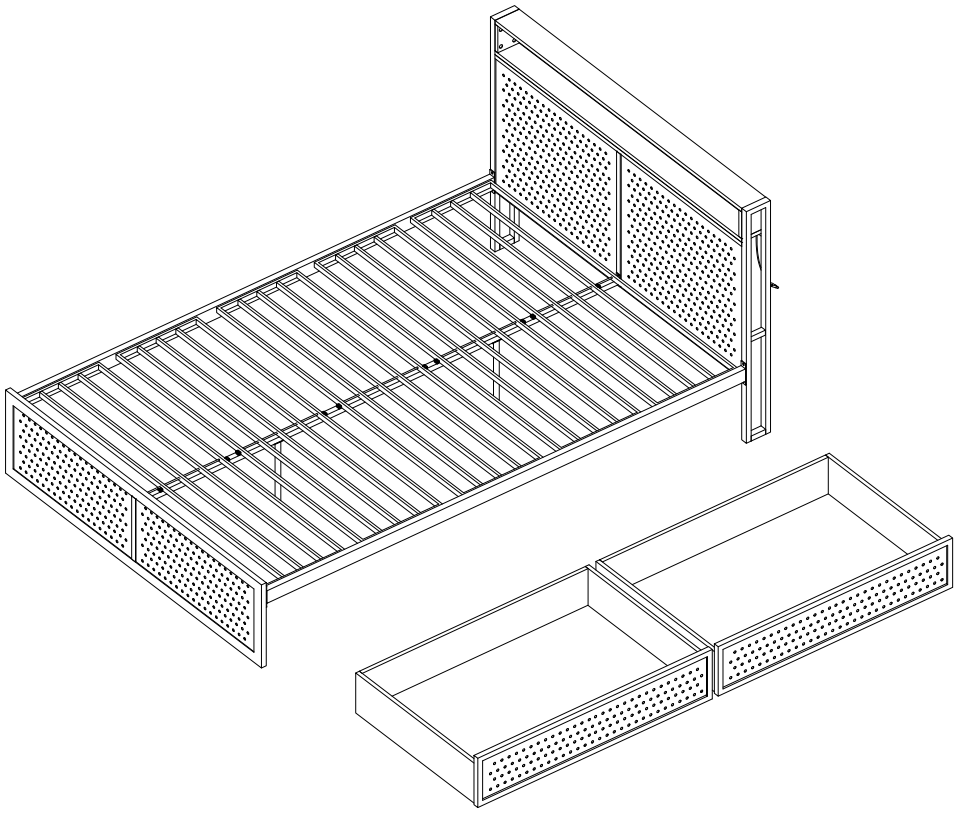

FOR PARTS & TECHNICAL SUPPORT VISIT:
TELEPHONE: 019 249 50108
EMAIL ADDRESS:
support@bedkingdom.co.uk

Manufacturer:	**FLAIR FURNITURE LTD**	**EU REP** **Contact Information:**	**FLAIR FURNITURE IRELAND LTD**
Address:	**Oldfield Ln, Heckmondwike WF16 0JD**	**Address:**	**20 Harcourt Street, Dublin, DO2H364**
Contact Information:	**support@bedkingdom.co.uk 01924950108**	**Contact Information:**	**help@bedkingdom.ie**

⚠ **WARNING: Contains small parts – choking hazard.**

⚠ **WARNING: Plastic packaging may cause suffocation. Keep away from babies and young children.**

⚠ **WARNING: Keep away from open flames and other heat sources.**

⚠ **WARNING: Ensure adequate airflow and ventilation at alltimes to prevent damp and mould**

⚠ **WARNING: Ensure all attachments are secure before use. Do not use if parts are loose or damaged.**

Tools required (Not Provided)

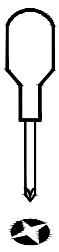

2 Person assembly recommend

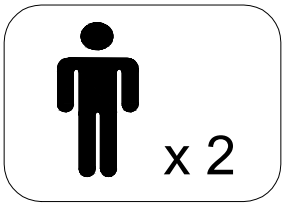

90min (Approx) Set Up

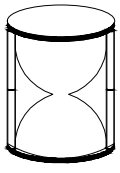

ASSEMBLY & SAFETY INFORMATION

This product has been designed and tested in accordance with BS EN 1725:2023 – Furniture – Beds – Requirements for Safety, Strength and Durability, and is intended for indoor domestic use.

BEFORE ASSEMBLY

Two-person assembly is recommended.

- Read these instructions carefully before assembly.
- Check that all components and fittings are present.
- Assemble the bed on a clean, flat and protected surface.
- Keep children and pets away from the assembly area.
- Do not use sharp tools when opening the packaging.
- Retain this instruction manual for future reference.

DURING ASSEMBLY

- Follow the assembly sequence exactly as shown.
- Do not fully tighten any bolts until the complete frame has been assembled.
- Tighten all fixings securely once assembly is complete.
- Use only the fixings supplied with this product.
- Never use power tools to tighten bolts, as over-tightening may damage the fittings.

BEFORE FIRST USE

- Ensure all bolts and fittings are securely tightened.
- Check that the bed stands level on the floor.
- Fit only the recommended mattress size.
- Confirm that the mattress is correctly positioned before use.

IMPORTANT

- This product is intended for indoor domestic use only.
- Always place the bed on a level, stable floor.
- Ensure all bolts and fittings are securely tightened before use.
- Recheck and tighten all fittings after the first few weeks of use and periodically thereafter.
- Do not jump, stand or bounce on the bed.
- Do not exceed the maximum recommended load for this product.
- Do not modify the product or use replacement parts that are not approved by the manufacturer.
- If any component becomes damaged or loose, discontinue use until it has been repaired or replaced.
- Keep plastic packaging away from babies and children to avoid the risk of suffocation.
- Use only a mattress with the following dimensions: **1200 × 1900 mm .** The mattress should fit securely within the bed frame without excessive gaps.

ENVIRONMENTAL CONDITIONS

For best performance:

- Avoid prolonged exposure to direct sunlight.
- Keep at least 300 mm away from radiators, fireplaces and other heat sources.
- Avoid damp rooms and excessive moisture.
- Allow adequate ventilation around the bed.

CARE & MAINTENANCE

- Clean using a soft damp cloth.
- Dry immediately after cleaning.
- Do not use abrasive cleaners, solvents or bleach.
- Inspect all bolts and fittings every 3–6 months and tighten if necessary.
- Replace damaged parts only with manufacturer-approved spare parts.

Parts List

Carton 1 of 3					
NO.	Part List	QTY	NO.	Part List	QTY
②	Footboard	1	⑤	Storage Front Panel	2
③	Side Rail	2	⑪	Mid Support leg	2
④	Slats	1	⑫	Mid Post Support Bar	1
			⑩	Remote controller	1

Carton 2 of 3					
NO.	Part List	QTY	NO.	Part List	QTY
①	Headboard	1	④	Slats	4

Carton 3 of 3					
NO.	Part List	QTY	NO.	Part List	QTY
⑥	Storage Back Panel	2	⑧	Storage Side Panel (L)	2
⑦	Storage Side Panel (R)	2	⑨	Storage Bottom Panel	2

Fitting List

A x 44	B x 44	C x 8	D x 20	E x 1
	 15 x 9 mm	 6 x 15 mm	 6 x 25 mm	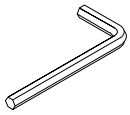

F x 16	G x 8	H x 8
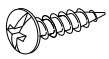		 6 x 12 mm

Parts List

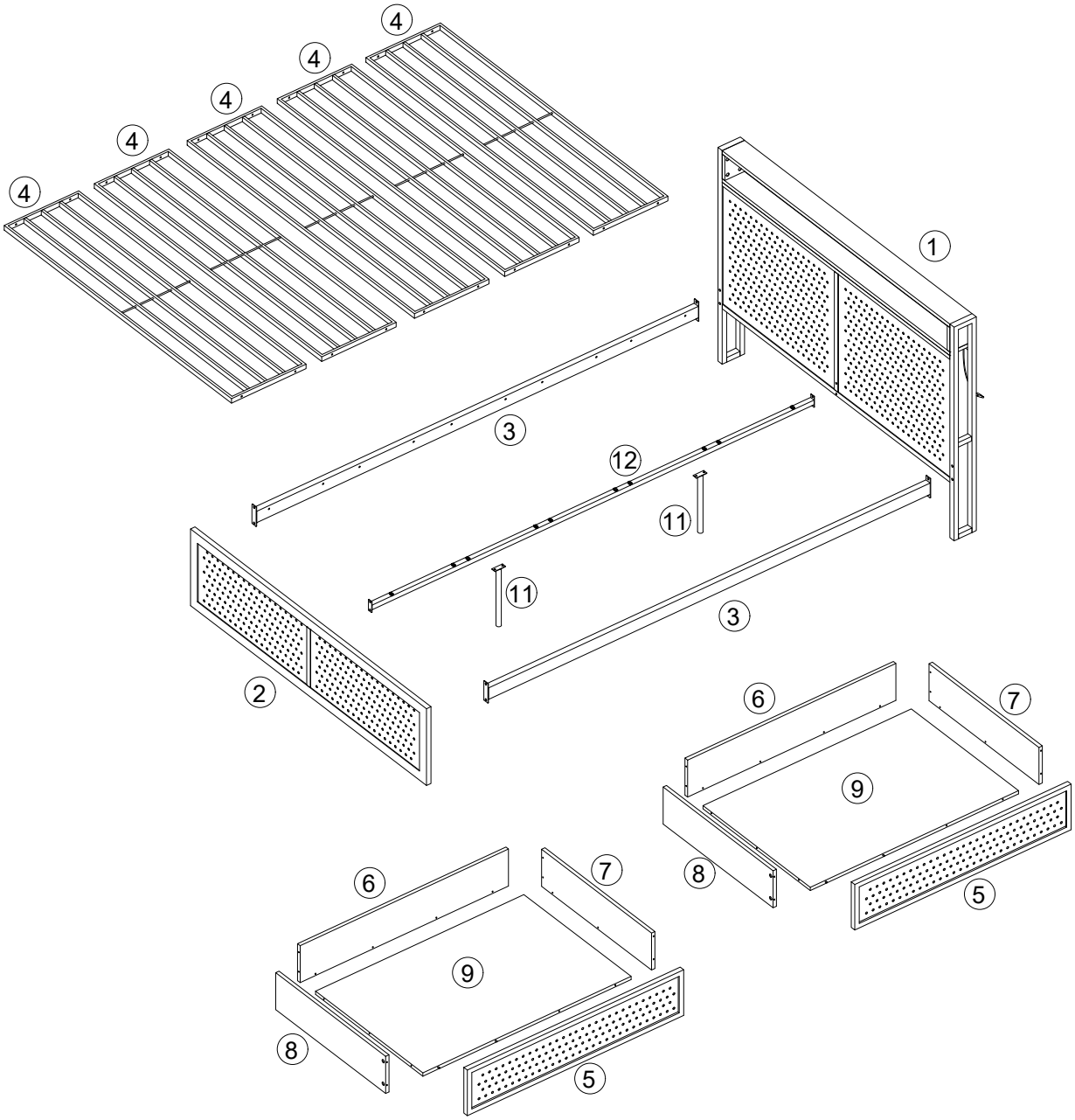

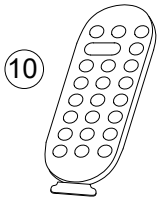

how to use the cam lock system

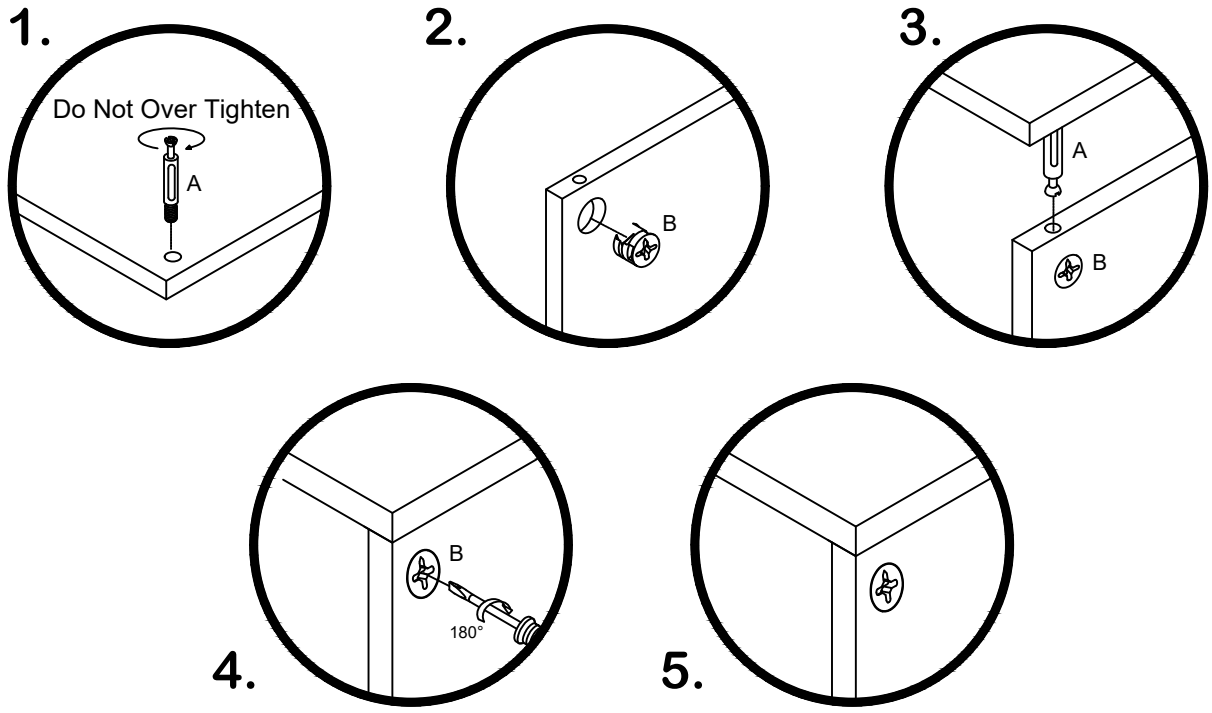

STEP 1

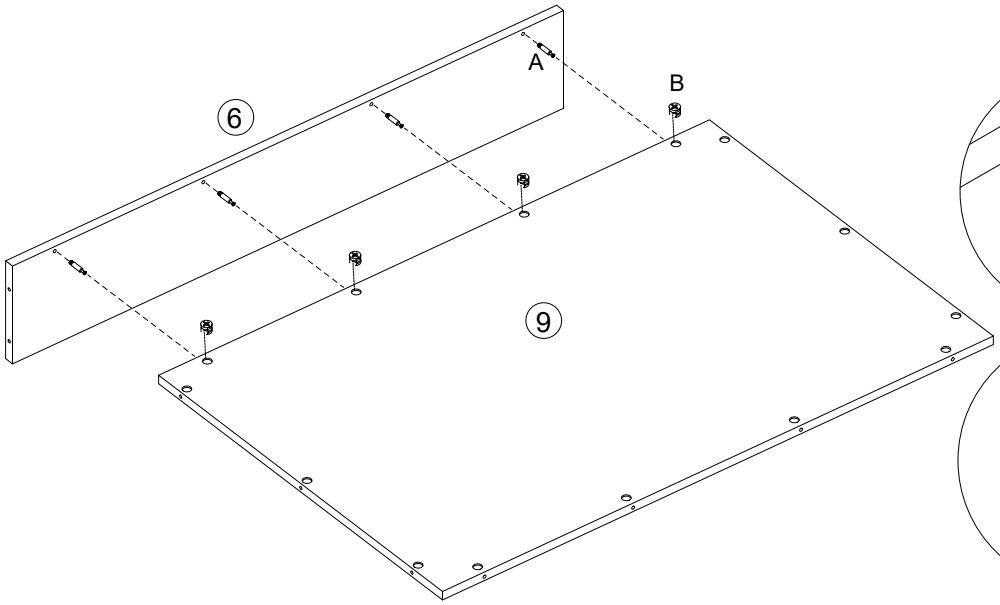

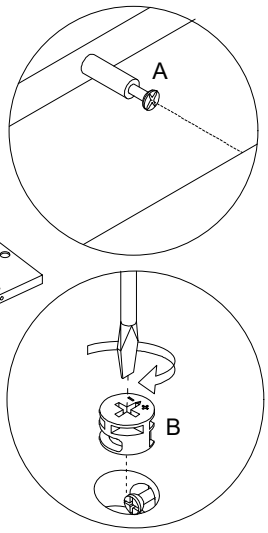

A x 4	B x 4
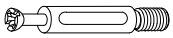	 15 x 9 mm

STEP 2

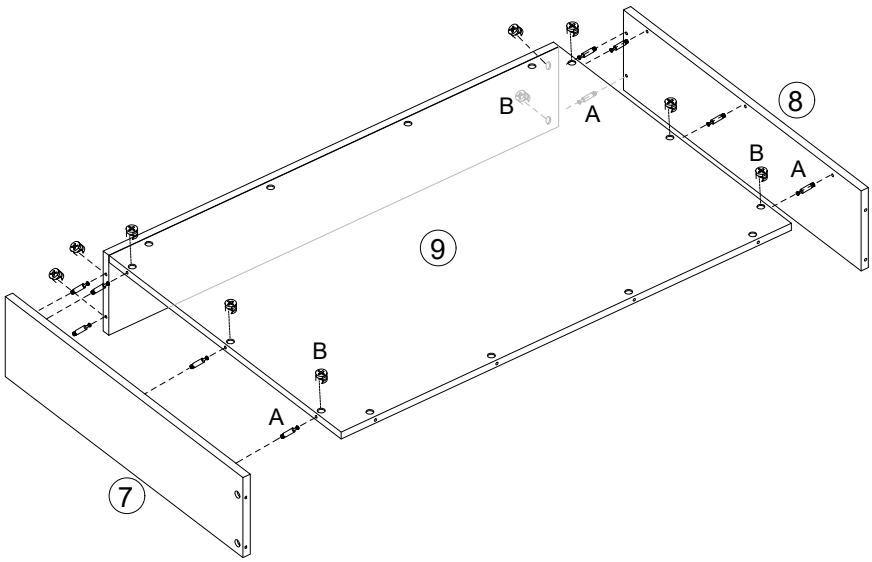

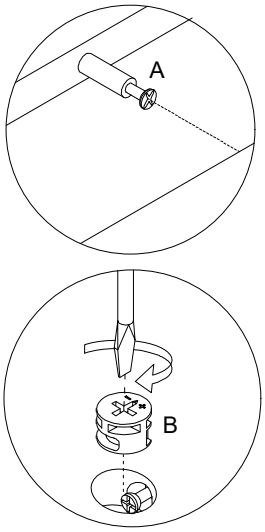

A x 10	B x 10
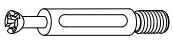	 15 x 9 mm

STEP 3

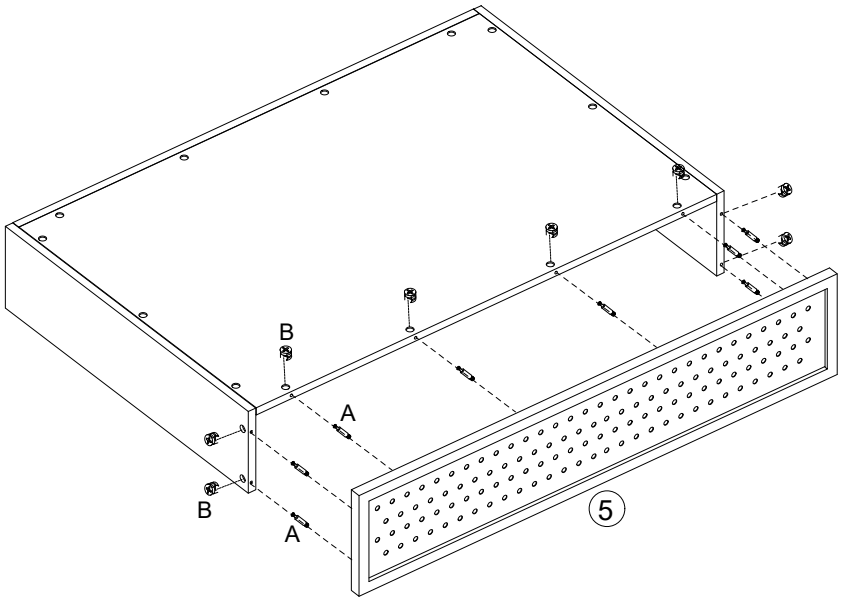

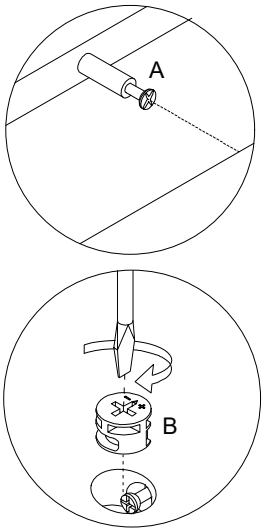

A x 8	B x 8
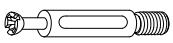	 15 x 9 mm

STEP 4

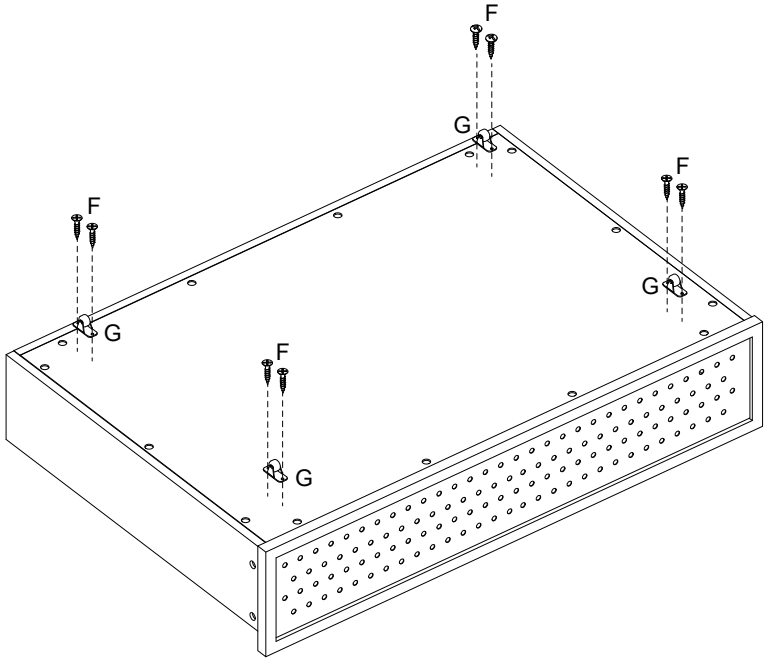

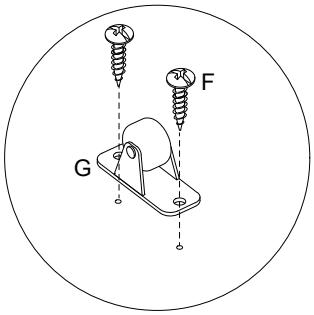

F x 8	G x 4
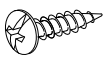	

STEP 5

X 2

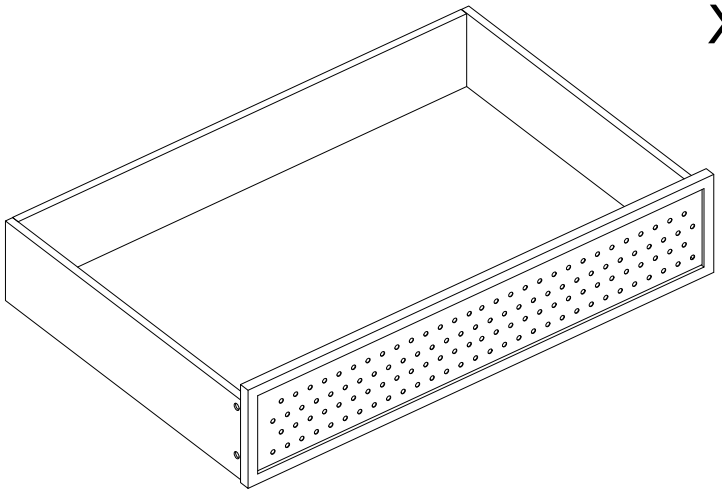

Remark:
Repeat Steps 1 through 4 in sequence.

STEP 6

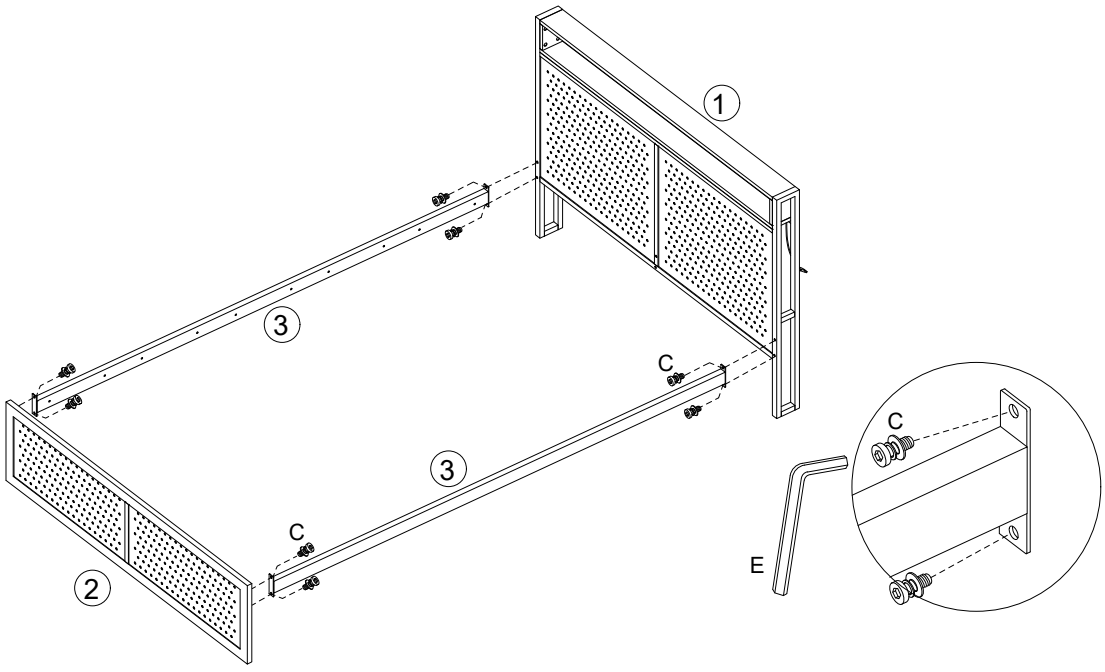

E x 1	C x 8
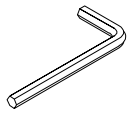	 6 x 15 mm

STEP 7

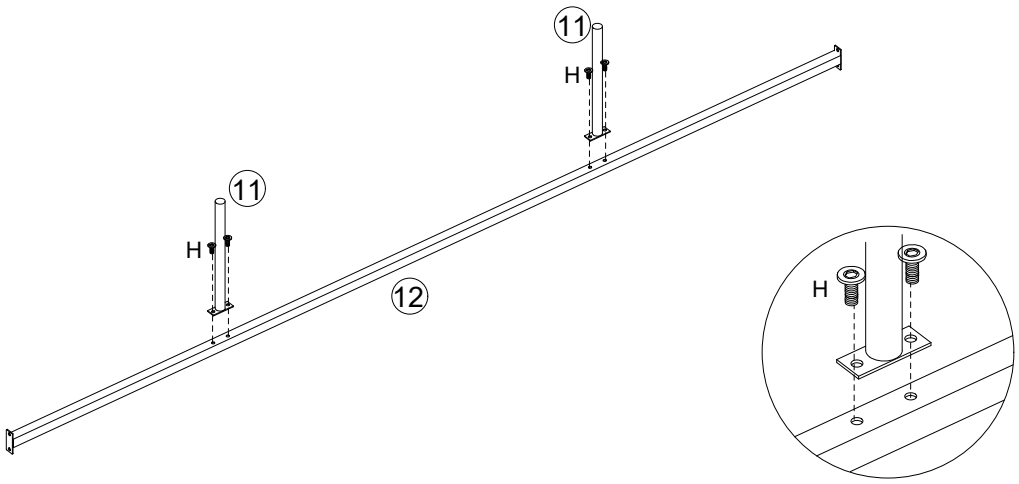

E x 1	H x4
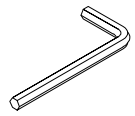	 6 x 12 mm

STEP 8

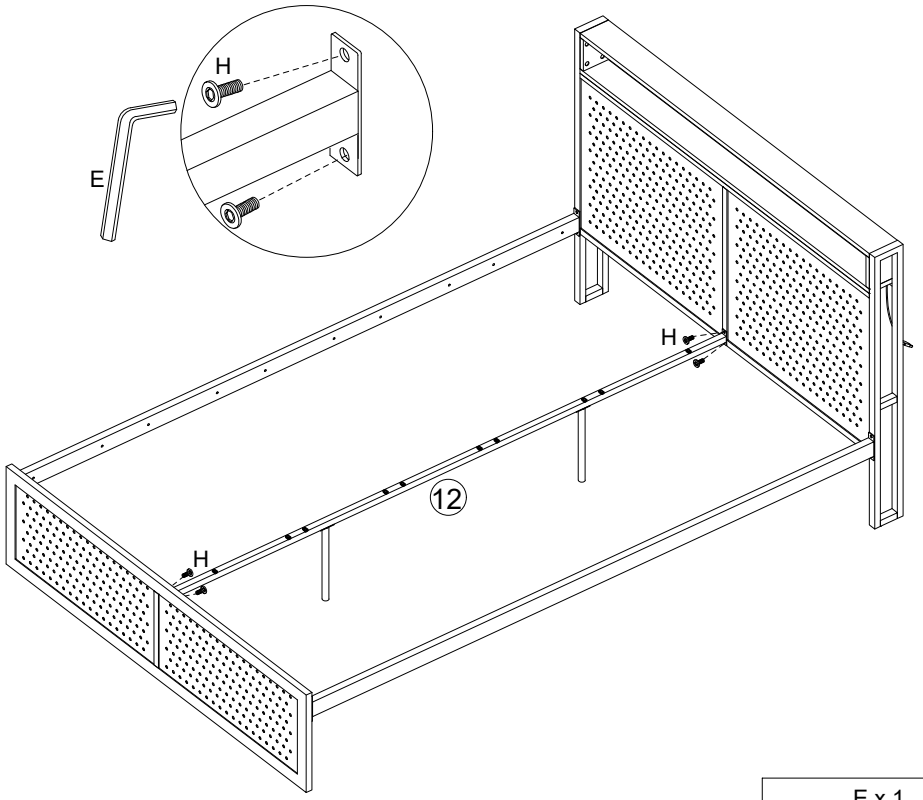

E x 1	H x 4
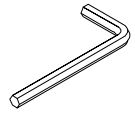	 6 x 12 mm

STEP 9

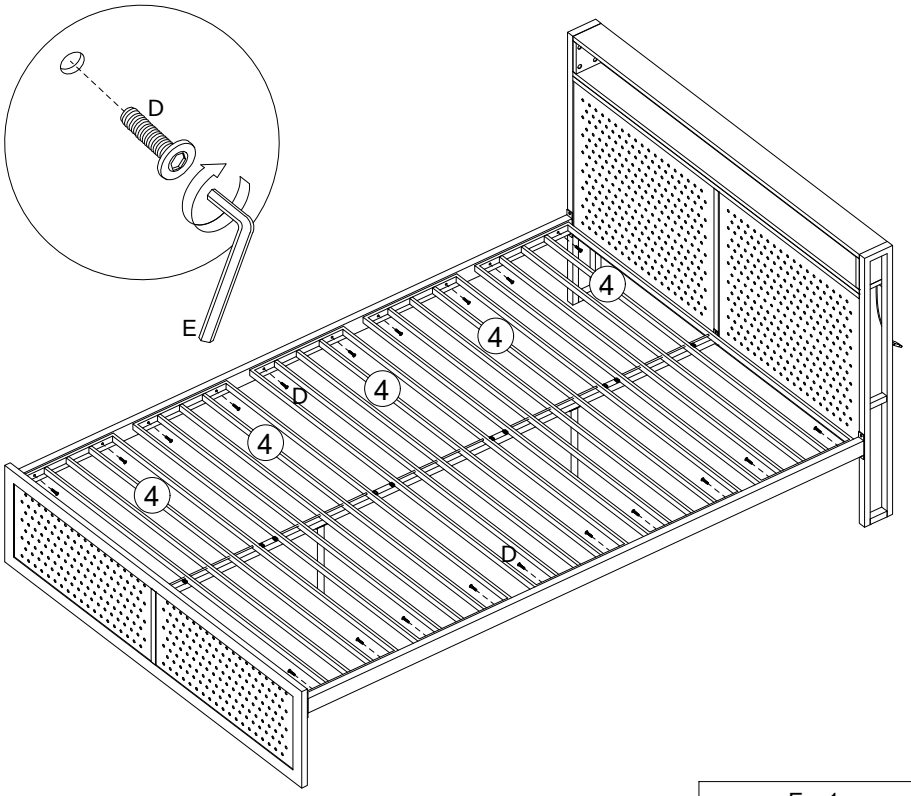

E x 1	D x 20
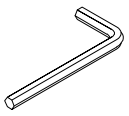	 6 x 25 mm

STEP 10

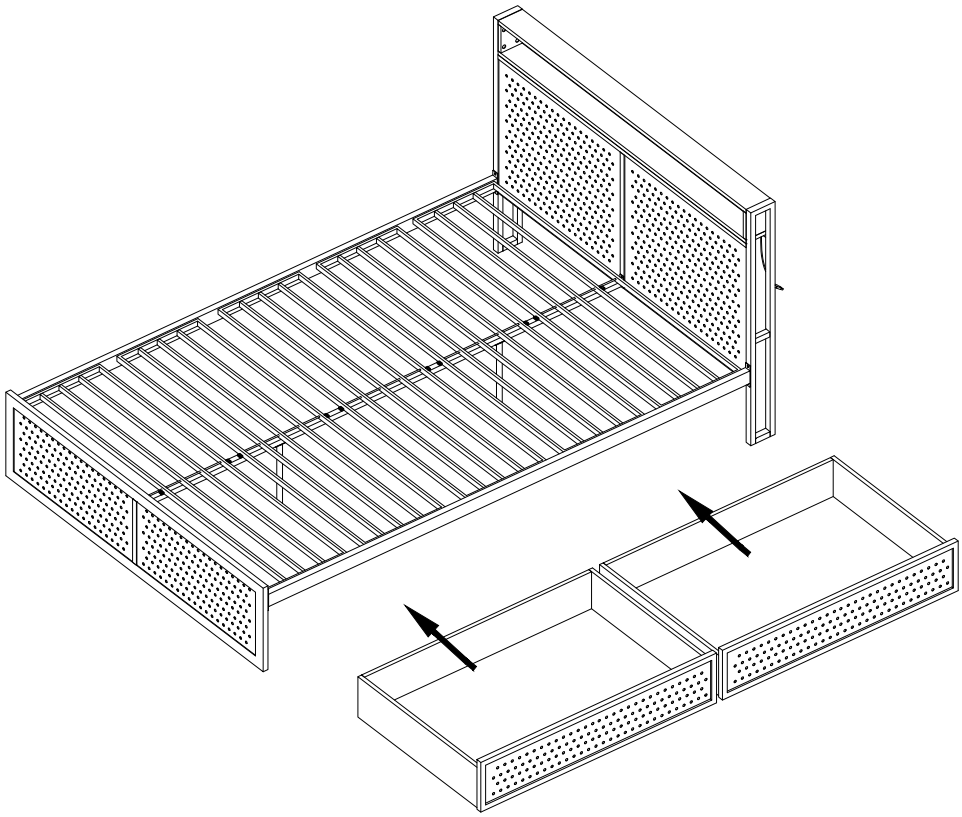

STEP 11

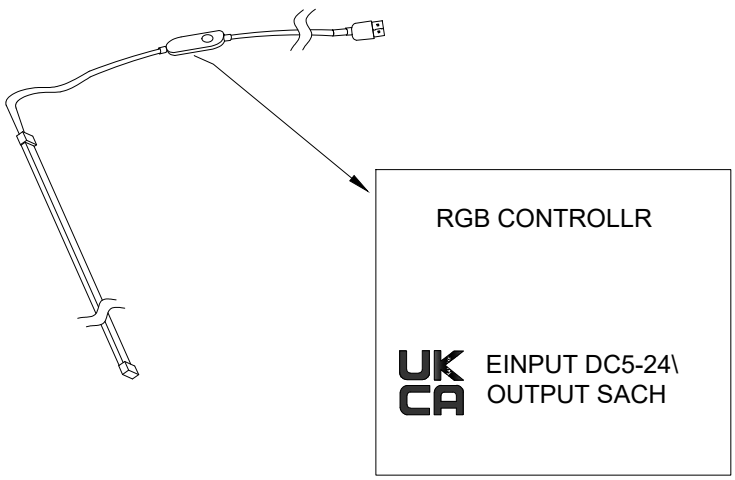

⚠ **Safety Warnings**

- •This remote control operates on batteries. Please insert the batteries correctly, following the indicated polarity (+/–). （Not provided)
- •Keep batteries out of reach of children. Small batteries may pose a choking or swallowing hazard. •Remove the batteries if they are depleted or if the remote control will not be used for an extended period to prevent leakage or damage.
- •Do not heat, disassemble, or dispose of batteries in fire, as this may cause injury or damage.

STEP 12

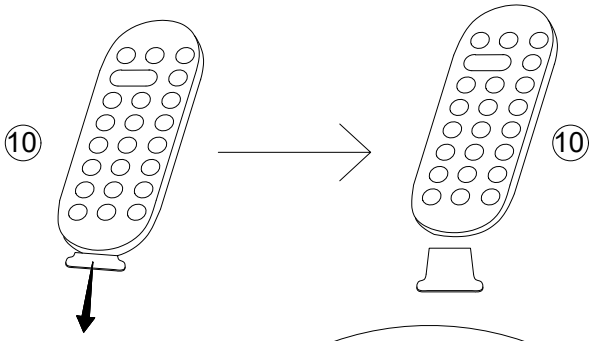

Notices

1.Please pull out the battery insulated plastic chip before using remote.

2.Press the lock key, the remote keys will be locked, press the lock key again, allthe remote keys will be unlocked.

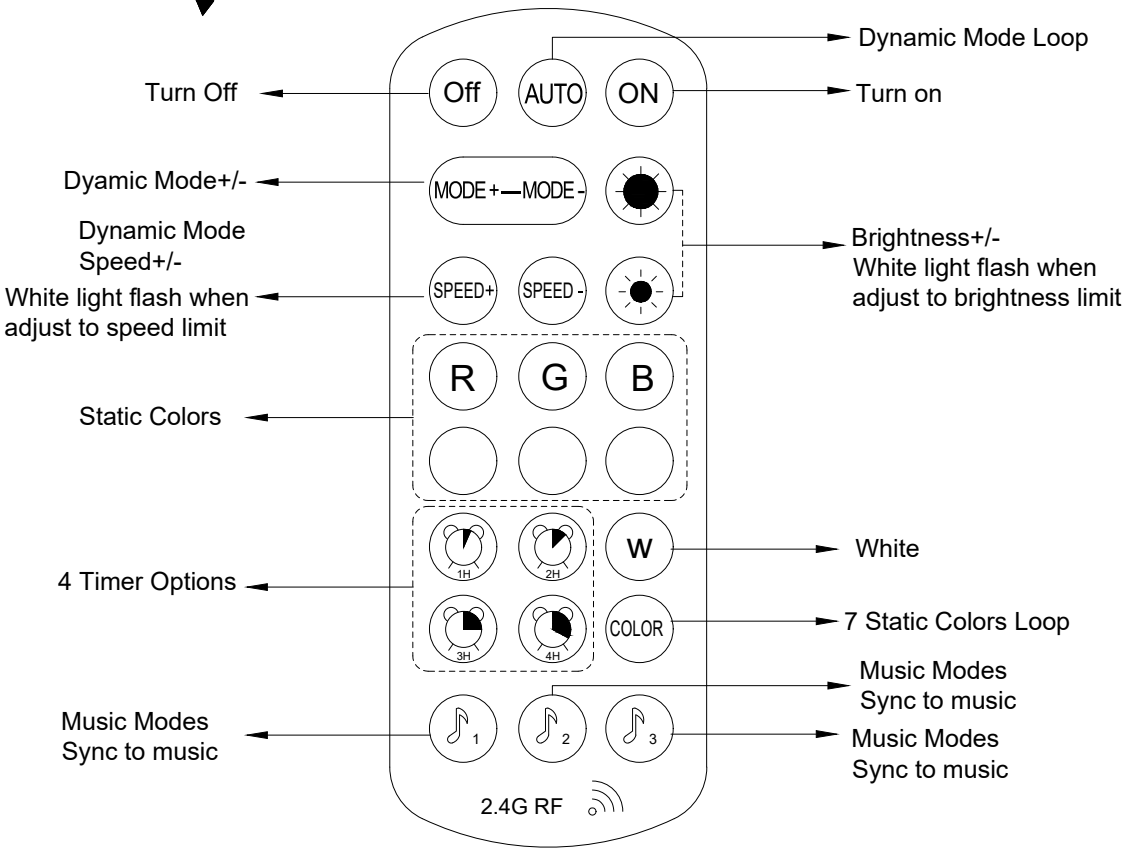

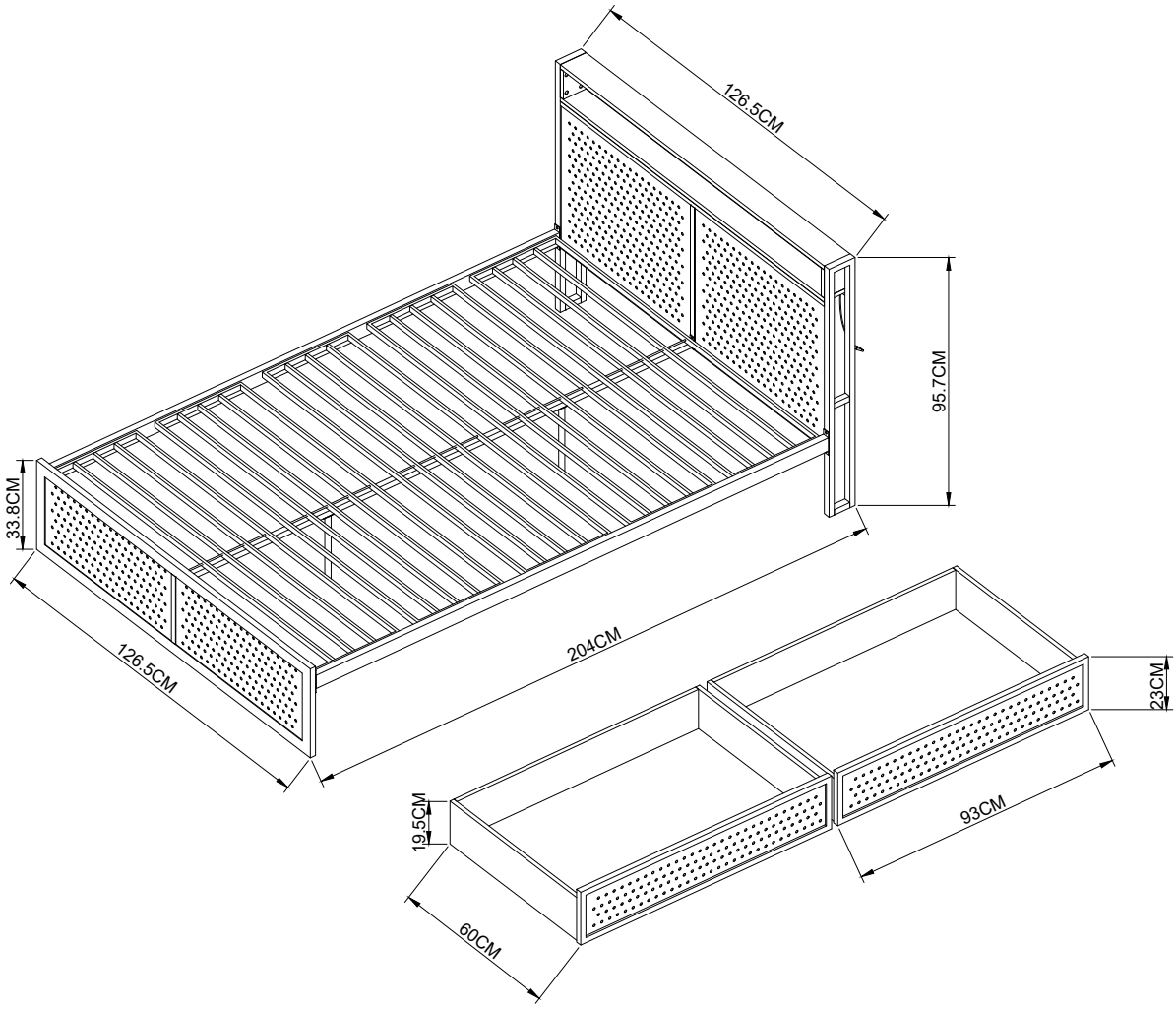
126.5CM
95.7CM
33.8CM
126.5CM
204CM
23CM
19.5CM
93CM
60CM